Publ 25 — 96941446.5

BOX IC

PCT / US 96 / 18764

BAR CODE LABEL

U.S. PATENT APPLICATION

SERIAL NUMBER	FILING DATE	CLASS	GROUP ART UNIT
08/642,254	05/02/96	395	2304

APPLICANT

STEPHEN M. SMYTH, THOUSAND OAKS, CA; MICHAEL H. SMYTH, AGOURA, CA; WILLIAM P. SMITH, WOODLAND HILLS, CA.

CONTINUING DATA********
VERIFIED PROVISIONAL APPLICATION NO. 60/007,896 12/01/95

REC'D 20 FEB 1997
WIPO PCT

FOREIGN/PCT APPLICATIONS********
VERIFIED UNITED STATES 60007896 12/01/95

PRIORITY DOCUMENT

FOREIGN FILING LICENSE GRANTED 06/11/96

STATE OR COUNTRY	SHEETS DRAWING	TOTAL CLAIMS	INDEPENDENT CLAIMS	FILING FEE RECEIVED	ATTORNEY DOCKET NO.
CA	26	90	16	$3,304.00	262-24-086

ADDRESS

KOPPEL & JACOBS
31255 CEDAR VALLEY DRIVE SUITE 302
WESTLAKE VILLAGE CA 91362-4031

TITLE

MULTI-CHANNEL PREDICTIVE SUBBAND AUDIO CODER USING PSYCHOACOUSTIC ADAPTIVE BIT ALLOCATION IN FREQUENCY, TIME AND OVER THE MULTIPLE CHANNELS

This is to certify that annexed hereto is a true copy from the records of the United States Patent and Trademark Office of the application which is identified above.

By authority of the
COMMISSIONER OF PATENTS AND TRADEMARKS

Date DEC 9 1996 Certifying Officer G. Ford

PATENT APPLICATION SERIAL NO. 08/642254

U.S. DEPARTMENT OF COMMERCE
PATENT AND TRADEMARK OFFICE
FEE RECORD SHEET

330 SD 05/14/96 08642254
1 101 3,304.00 CK

PTO-1556
(5/87)

08/642254



APPLICATION

OF

STEPHEN M. SMYTH
MICHAEL H. SMYTH
WILLIAM P. SMITH

FOR

UNITED STATES LETTERS PATENT

ON

A MULTI-CHANNEL PREDICTIVE SUBBAND AUDIO CODER USING PSYCHOACOUSTIC ADAPTIVE BIT ALLOCATION IN FREQUENCY, TIME AND OVER THE MULTIPLE CHANNELS

Docket No. 262-24-086

ASSIGNED TO

DTS TECHNOLOGY, LCC

I hereby certify that on **May 2, 1996**, which is also the date I am signing this declaration, this application is being deposited with the United States Postal Service "Express Mail Post Office to Addressee" service under 37 C.F.R. §1.10 addressed to the Commissioner of Patents and Trademarks, Washington, D.C. 20231. The "Express Mail" marking label number is EM184629997.

Jeanette E. Casserly

Jeanette E. Casserly

3304 101 A
08/642254

JM MAY 2 1996 PAT. & TRADEMARK OFF.

A MULTI-CHANNEL PREDICTIVE SUBBAND AUDIO CODER USING PSYCHOACOUSTIC ADAPTIVE BIT ALLOCATION IN FREQUENCY, TIME AND OVER THE MULTIPLE CHANNELS

RELATED APPLICATION

This application is a continuation-in-part of provisional application Serial No. 60/007,896 filed December 1, 1995.

BACKGROUND OF THE INVENTION

Field of the Invention

This invention relates to high quality encoding and decoding of multi-channel audio signals and more specifically to a subband encoder that employs perfect/non-perfect reconstruction filters, predictive/non-predictive subband encoding, transient analysis, and psycho-acoustic/minimum mean-square-error (mmse) bit allocation over time, frequency and the multiple audio channels to generate a data stream with a constrained decoding computational load.

Description of the Related Art

Pulse code modulation (PCM) based speech coders were first developed in the 1960's. In the early 1970's, low bit-rate speech coders were developed for use with the digital telephone networks, which had a restricted bandwidth of approximately 3.5 kHz. In 1979 Johnston outlined a 7.5 kHz sub-band differential PCM (DPCM) that was suitable for speech and music signals. In the early 1980's this work was developed using more sophisticated adaptive DPCM techniques (ADPCM), but it was not until 1988 that a true wideband high quality ADPCM coder was discussed.

In the mid-late 1980's new methods for coding very high quality audio signals were developed based on high resolution filter-banks and/or transform coders, in which the quantizer bit-allocations were determined by a psychoacoustic masking model. In general, the psychoacoustic masking model tries to establish a quantization noise audibility threshold at all frequencies. The threshold is used to allocate quantization bits to reduce the likelihood that the quantization noise will become audible. The quantization noise threshold is calculated in the frequency domain from the absolute energy of the frequency-transformed audio signal. The dominant frequency components of the audio signal tend to mask the audibility of other components which are close in the bark scale (human auditory frequency scale) to the dominant signal.

Thus, the known high quality audio and music coders can be divided into two broad classes of schemes.

1) Medium to high frequency resolution subband/transform coders which adaptively quantize the subband or coefficient samples within the analysis window according to a psychoacoustic mask calculation.

These coders exploit the large short-term spectral variances of general music signals by allowing the bit-allocations to adapt according to the spectral energy of the signal. The high resolution of these coders allows the frequency transformed signal to be applied directly to the psychoacoustic model, which is based on a critical band theory of hearing. Dolby's AC-3 audio coder, Todd et al., "AC-3: Flexible Perceptual Coding for Audio Transmission and Storage" Convention of the Audio Engineering Society, February, 1994, typically computes 1024-ffts on the respective PCM signals and applies a psychoacoustic model to the 1024 frequency coefficients in each channel to determine the bit rate for each coefficient. The Dolby system uses a transient analysis that reduces the window size to 256 samples to isolate the transients. The AC-3 coder uses a proprietary backward adaptation algorithm to

decode the bit allocation. This reduces the amount of bit allocation information that is sent along side the encoded audio data. As a result, the bandwidth available to audio is increased over forward adaptive schemes which leads to an improvement in sound quality.

2) Low resolution subband coders which make-up for their poor frequency resolution by processing the subband samples using ADPCM. The quantization of the differential subband signals is either fixed or adapts to minimize the quantization noise power across all or some of the subbands, without any explicit reference to psychoacoustic masking theory. It is commonly accepted that a direct psychoacoustic distortion threshold cannot be applied to predictiv e/differential subband signals because of the difficulty in estimating the predictor performance ahead of the bit allocation process. The problems is further compounded by the interaction of quantization noise on the prediction process.

These coders work because perceptually critical audio signals are generally periodic over long periods of time. This periodicity is exploited by predictive differential quantization. Splitting the signal into a small number of sub-bands reduces the audible effects of noise modulation and allows the exploitation of long-term spectral variances in audio signals. If the number of subbands is increased, the prediction gain within each sub-band is reduced and at some point the prediction gain will tend to zero.

Digital Theater Systems, L.P. (DTS) makes use of an audio coder in which each PCM audio channel is filtered into four subbands and each subband is encoded using a backward ADPCM encoder that adapts the predictor coefficients to the sub-band data. The bit allocation is fixed and the same for each channel, with the lower frequency subbands being assigned more bits than the higher frequency subbands. The bit allocation provides a fixed compression ratio, for example, 4:1. The DTS coder is described by Mike Smyth and [illegible] Smyth, "APT-X100: A LOW-DELAY, LOW BIT-RATE, SUB-BAND ADPCM AUDIO CODER FOR BROADCASTING," Proceedings of the

10th International AES Conference 1991, pp. 41-56.

Both types of audio coders have other common limitations. First, known audio coders encode/decode with a fixed frame size, i.e. the number of samples or period of time represented by a frame is fixed. As a result, as the encoded transmission rate increases relative to the sampling rate, the amount of data (bytes) in the frame also increases. Thus, the decoder buffer size must be designed to accommodate the worst case scenario to avoid data overflow. This increases the amount of RAM, which is a primary cost component of the decoder. Secondly, the known audio coders are not easily expandable to sampling frequencies greater than 48 kHz. To do so would make the existing decoders incompatible with the format required for the new encoders. This lack of future compatibility is a serious limitation. Furthermore, the known formats used to encode the PCM data require that the entire frame be read in by the decoder before playback can be initiated. This requires that the buffer size be limited to approximately 100ms blocks of data such that the delay or latency does not annoy the listener.

In addition, although these coders have encoding capability up to 24kHz, often times the higher subbands are dropped. This reduces the high frequency fidelity or ambiance of the reconstructed signal. Known encoders typically employ one of two types of error detection schemes. The most common is Read Solomon coding, in which the encoder adds error detection bits to the side information in the data stream. This facilitates the detection and correction of any errors in the side information. However, errors in the audio data go undetected. Another approach is to check the frame and audio headers for invalid code states. For example, a particular 3-bit parameter may have only 3 valid states. If one of the other 5 states is identified then an error must have occurred. This only provides detection capability and does not detect errors in the audio data.

SUMMARY OF THE INVENTION

In view of the above problems, the present invention provides a multi-channel audio coder with the flexibility to accommodate a wide range of compression levels with better than CD quality at high bit rates and improved perceptual quality at low bit rates, with reduced playback latency, simplified error detection, improved pre-echo distortion, and future expandability to higher sampling rates.

This is accomplished with a subband coder that windows each audio channel into a sequence of audio frames, filters the frames into baseband and high frequency ranges, and decomposes each baseband signal into a plurality of subbands. The subband coder normally selects a non-perfect filter to decompose the baseband signal when the bit rate is low, but selects a perfect filter when the bit rate is sufficiently high. A high frequency coding stage encodes the high frequency signal independently of the baseband signal. A baseband coding stage includes a VQ and an ADPCM coder that encode the higher and lower frequency subbands, respectively. Each subband frame includes at least one subframe, each of which are further subdivided into a plurality of sub-subframes. Each subframe is analyzed to estimate the prediction gain of the ADPCM coder, where the prediction capability is disabled when the prediction gain is low, and to detect transients to adjust the pre and post-transient SFs.

A global bit management (GBM) system allocates bits to each subframe by taking advantage of the differences between the multiple audio channels, the multiple subbands, and the subframes within the current frame. The GBM system initially allocates bits to each subframe by calculating its SMR modified by the prediction gain to satisfy a psychoacoustic model. The GBM system then allocates any remaining bits according to a MMSE approach to either immediately switch to a MMSE allocation, lower the overall noise floor, or gradually morph to a MMSE allocation.

A multiplexer generates output frames that include a sync word, a frame header, an audio header and at least one

subframe, and which are multiplexed into a data stream at a transmission rate. The frame header includes the window size and the size of the current output frame. The audio header indicates a packing arrangement and a coding format for the audio frame. Each audio subframe includes side information for decoding the audio subframe without reference to any other subframe, high frequency VQ codes, a plurality of baseband audio sub-subframes, in which audio data for each channel's lower frequency subbands is packed and multiplexed with the other channels, a high frequency audio block, in which audio data in the high frequency range for each channel is packed and multiplexed with the other channels so that the multi-channel audio signal is decodable at a plurality of decoding sampling rates, and an unpack sync for verifying the end of the subframe.

The window size is selected as a function of the ratio of the transmission rate to the encoder sampling rate so that the size of the output frame is constrained to lie in a desired range. When the amount of compression is relatively low the window size is reduced so that the frame size does not exceed an upper maximum. As a result, a decoder can use an input buffer with a fixed and relatively small amount of RAM. When the amount of compression is relatively high, the window size is increased. As a result, the GBM system can distribute bits over a larger time window thereby improving encoder performance.

These and other features and advantages of the invention will be apparent to those skilled in the art from the following detailed description of preferred embodiments, taken together with the accompanying drawings and tables, in which:

BRIEF DESCRIPTION OF THE DRAWINGS

FIG. 1 is a block diagram of a 5-channel audio coder in accordance with the present invention;

FIG. 2 is a block diagram of a multi-channel encoder;

FIG. 3 is a block diagram of the baseband encoder and

decoder;

FIGs. 4a and 4b are block diagrams of an encoder and a decoder, respectively, at high sampling rates;

FIG. 5 is a block diagram of a single channel encoder;

FIG. 6 is a plot of the bytes per frame versus frame size for variable transmission rates;

FIG. 7 is a plot of the amplitude response for the NPR and PR reconstruction filters;

FIG. 8 is a plot of the subband aliasing for a reconstruction filter;

FIG. 9 is a plot of the distortion curves for the NPR and PR filters;

FIG. 10 is a schematic diagram of the forward ADPCM encoding block shown in FIG. 5;

FIG. 11 is a schematic diagram of the forward ADPCM decoding block shown in FIG. 5;

FIGs. 12a through 12e are frequency response plots illustrating the joint frequency coding process shown in FIG. 5;

FIG. 13 is a schematic diagram of a single subband encoder;

FIGs. 14a and 14b transient detection and scale factor computation, respectively, for a subframe;

FIG. 15 illustrates the entropy coding process for the quantized TMODES;

FIG. 16 illustrates the scale factor quantization process;

FIG. 17 illustrates the entropy coding process for the scale factors;

FIG. 18 illustrates the convolution of a signal mask with the signal's frequency response to generate the SMRs;

FIG. 19 is a plot of the human auditory response;

FIG. 20 is a plot of the SMRs for the subbands;

FIG. 21 is a plot of the error signals for the psychoacoustic and mmse bit allocations;

FIGs. 22a and 22b are a plot of the subband energy levels and the inverted plot, respectively, illustrating the

mmse "waterfilling" bit allocation process;

FIG. 23 illustrates the entropy coding process for the ADPCM quantizer codes;

FIG. 24 illustrates the bit rate control process;

FIG. 25 is a block diagram of a single frame in the data stream;

FIG. 26 is a flowchart of the decoding process;

FIG. 27 is a schematic diagram of the decoder;

FIG. 28 is a flowchart of the I/O procedure;

FIG. 29 is a block diagram of a hardware implementation for the encoder;

FIG. 30 is a block diagram of the audio mode control interface for the encoder shown in FIG. 29; and

FIG. 31 is a block diagram of a hardware implementation for the decoder.

BRIEF DESCRIPTION OF THE TABLES

Table 1 tabulates the maximum frame size versus sampling rate and transmission rate;

Table 2 tabulates the maximum allowed frame size (bytes) versus sampling rate and transmission rate;

Table 3 tabulates the prediction efficiency factor versus quantization levels;

Table 4 illustrates the relationship between ABIT index value, the number of quantization levels and the resulting subband SNR;

Table 5 tabulates typical nominal word lengths for the possible entropy ABIT indexes;

Table 6 indicates which channels are joint frequency coded and where the coded signal is located;

Table 7 selects the appropriate entropy codebook for a given ABIT and SEL index;

Table 8 selects the physical output channel assignments; and

Table 9 is a fixed down matrix table for an 8-ch decoded audio signal.

DETAILED DESCRIPTION OF THE INVENTION

Multi-Channel Audio Coding System

As shown in **FIG. 1**, the present invention combines the features of both of the known encoding schemes plus additional features in a single multi-channel audio coder **10**. The encoding algorithm is designed to perform at studio quality levels i.e. "better than CD" quality and provide a wide range of applications for varying compression levels, sampling rates, word lengths, number of channels and perceptual quality. An important objective in designing the audio coder was to ensure that the decoding algorithm is relatively simple and future compatible. This reduces the cost of contemporary decoding equipment and allows consumers to benefit from future improvements in the encoding stage such as higher sampling rates or bit allocation routines.

The encoder **12** encodes multiple channels of PCM audio data **14**, typically sampled at 48kHz with word lengths between 16 and 24 bits, into a data stream **16** at a known transmission rate, suitably in the range of 32-4096kbps. Unlike known audio coders, the present architecture can be expanded to higher sampling rates (48-192kHz) without making the existing decoders, which were designed for the baseband sampling rate or any intermediate sampling rate, incompatible. Furthermore, the PCM data **14** is windowed and encoded a frame at a time where each frame is preferably split into 1-4 subframes. The size of the audio window, i.e. the number of PCM samples, is based on the relative values of the sampling rate and transmission rate such that the size of an output frame, i.e. the number of bytes, read out by the decoder **18** per frame is constrained, suitably between 5.3 and 8 kbytes.

As a result, the amount of RAM required at the decoder to buffer the incoming data stream is kept relatively low, which reduces the cost of the decoder. At low rates larger window sizes can be used to frame the PCM data, which improves the coding performance. At higher bit rates,

smaller window sizes must be used to satisfy the data constraint. This necessarily reduces coding performance, but at the higher rates it is insignificant. Also, the manner in which the PCM data is framed allows the decoder **18** to initiate playback before the entire output frame is read into the buffer. This reduces the delay or latency of the audio coder.

The encoder **12** uses a high resolution filterbank, which preferably switches between non-perfect (NPR) and perfect (PR) reconstruction filters based on the bit rate, to decompose each audio channel **14** into a number of subband signals. Predictive and vector quantization (VQ) coders are used to encode the lower and upper frequency subbands, respectively. The start VQ subband can be fixed or may be determined dynamically as a function of the current signal properties. Joint frequency coding may be employed at low bit rates to simultaneously encode multiple channels in the higher frequency subbands.

The predictive coder preferably switches between APCM and ADPCM modes based on the subband prediction gain. A transient analyzer segments each subband subframe into pre and post-echo signals (sub-subframes) and computes respective scale factors for the pre and post-echo sub-subfr ames thereby reducing pre-echo distortion. The encoder adaptively allocates the available bit rate across all of the PCM channels and subbands for the current frame according to their respective needs (psychoacoustic or mse) to optimize the coding efficiency. By combining predictive coding and psychoacoustic modeling, the low bit rate coding efficiency is enhanced thereby lowering the bit rate at which subjective transparency is achieved. A programmable controller **19** such as a computer or a key pad interfaces with the encoder 12 to relay audio mode information including parameters such as the desired bit rate, the number of channels, PR or NPR reconstruction, sampling rate and transmission rate.

The encoded signals and sideband information are packed

and multiplexed into the data stream **16** such that the decoding computational load is constrained to lie in the desired range. The data stream **16** is encoded on or broadcast over a transmission medium **20** such as a CD, a digital video disk (DVD), or a direct broadcast satellite. The decoder **18** decodes the individual subband signals and performs the inverse filtering operation to generate a multi-channel audio signal **22** that is subjectively equivalent to the original multi-channel audio signal **14**. An audio system **24** such as a home theater system or a multimedia computer play back the audio signal for the user.

Multi-Channel Encoder

As shown in **FIG. 2**, the encoder **12** includes a plurality of individual channel encoders **26**, suitably five (left front, center, right front, left rear and right rear), that produce respective sets of encoded subband signals **28**, suitably 32 subband signals per channel. The encoder **12** employs a global bit management (GBM) system **30** that dynamically allocates the bits from a common bit-pool among the channels, between the subbands within a channel, and within an individual frame in a given subband. The encoder **12** may also use joint frequency coding techniques to take advantage of inter-channel correlations in the higher frequency subbands. Furthermore, the encoder **12** can use VQ on the higher frequency subbands that are not specifically perceptible in order to provide a basic high frequency fidelity or ambiance at a very low bit rate. In this way, the coder takes advantage of the disparate signal demands, e.g. the subbands' rms values and psychoacoustic masking levels, of the multiple channels and the non-uniform distribution of signal energy over frequency in each channel and over time in a given frame.

Bit Allocation Overview

The GBM system **30** first decides which channels'

subbands will be joint frequency coded and averages that data, and then determines which subbands will be encoded using VQ and subtracts those bits from the available bit rate. The decision of which subbands to VQ can be made a priori in that all subbands above a threshold frequency are VQ or can be made based on the psychoacoustic masking effects of the individual subbands in each frame. Thereafter, the GBM system **30** allocates bits (ABIT) using psychoacoustic masking on the remaining subbands to optimize the subjective quality of the decoded audio signal. If additional bits are available, the encoder can switch to a pure mmse scheme, i.e. "waterfilling", and reallocate all of the bits based on the subbands relative rms values to minimize the rms value of the error signal. This is applicable at very high bit rates. The preferred approach is to retain the psychoacoustic bit allocation and allocate only the additional bits according to the mmse scheme. This maintains the shape of the noise signal created by the psychoacoustic masking, but uniformly shifts the noise floor downwards. Alternately, the preferred approach can be modified such that the additional bits are allocated according to the difference between the rms and psychoacoustic levels. As a result, the psychoacoustic allocation morphs to a mmse allocation as the bit rate increases thereby providing a smooth transition between the two techniques. The above techniques are specifically applicable for fixed bit rate systems. Alternately, the encoder **12** can set a distortion level, subjective or mse, and allow the overall bit rate to vary to maintain the distortion level. A multiplexer **32** multiplexes the subband signals and side information into the data stream **16** in accordance with a specified data format. Details of the data format are discussed in **FIG. 25** below.

Baseband Encoding

For sampling rates in the range 8 - 48kHz, the channel encoder **26**, as shown in **FIG. 3**, employs a uniform 512-tap

32-band analysis filter bank **34** operating at a sampling rate of 48kHz to split the audio spectrum, 0 - 24kHz, of each channel into 32 subbands having a bandwidth of 750 Hz per subband. The coding stage **36** codes each subband signal and multiplexes **38** them into the compressed data stream **16**. The decoder **18** receives the compressed data stream, separates out the coded data for each subband using an unpacker **40**, decodes each subband signal **42** and reconstructs the PCM digital audio signals (Fsamp=48kHz) using a 512-tap 32-band uniform interpolation filter bank **44** for each channel.

In the present architecture, all of the coding strategies, e.g. sampling rates of 48, 96 or 192 kHz, use the 32-band encoding/decoding process on the lowest (baseband) audio frequencies, for example between 0 - 24kHz. Thus, decoders that are designed and built today based upon a 48kHz sampling rate will be compatible with future encoders that are designed to take advantage of higher frequency components. The existing decoder would read the baseband signal (0-24kHz) and ignore the encoded data for the higher frequencies.

High Sampling Rate Encoding

For sampling rates in the range 48 - 96kHz, the channel encoder **26** preferably splits the audio spectrum in two and employs a uniform 32-band analysis filter bank for the bottom half and an 8-band analysis filter bank for the top half. As shown in **FIGs. 4a** and **4b**, the audio spectrum, 0 - 48kHz, is initially split using a 256-tap 2-band decimation pre-filter bank **46** giving an audio bandwidth of 24kHz per band. The bottom band (0 - 24kHz) is split and encoded in 32 uniform bands in the manner described above in **FIG. 3**. The top band (24 - 48kHz) however, is split and encoded in 8 uniform bands. If the delay of the 8-band decimation/interpolation filter bank **48** is not equal to that of the 32-band filter banks then a delay compensation stage **50** must be employed somewhere in the 24 - 48kHz signal path to

ensure that both time waveforms line up prior to the 2-band recombination filter bank at the decoder. In the 96kHz sampling encoding system, the 24 - 48kHz audio band is delayed by 384 samples and then split into the 8 uniform bands using a 128-tap interpolation filter bank. Each of the 3kHz subbands is encoded **52** and packed **54** with the coded data from the 0 - 24kHz band to form the compressed data stream **16**.

On arrival at the decoder **18**, the compressed data stream **16** is unpacked **56** and the codes for both the 32-band decoder (0 - 24kHz region) and 8-band decoder (24 - 48kHz) are separated out and fed to their respective decoding stages **42** and **58**, respectively. The eight and 32 decoded subbands are reconstructed using 128-tap and 512-tap uniform interpolation filter banks **60** and **44**, respectively. The decoded subbands are subsequently recombined using a 256-tap 2-band uniform interpolation filter bank **62** to produce a single PCM digital audio signal with a sampling rate of 96kHz. In the case when it is desirable for the decoder to operate at half the sampling rate of the compressed data stream, this can be conveniently carried out by discarding the upper band encoded data (24 - 48kHz) and decoding only the 32-subbands in the 0 - 24kHz audio region.

For sampling rates in the range 96 - 192kHz the coding system splits the audio spectrum into four uniform bands and employs a uniform 32-band analysis filter bank for the first band, an 8-band analysis filter bank for the second band, and single band coding processes for both the third and fourth bands. The audio spectrum, 0 - 96kHz, is initially split using a 256-tap 4-band decimation pre-filter bank giving an audio bandwidth of 24kHz per band. The first band (0 - 24kHz) is split and encoded in 32 uniform bands in the same manner as described above for sampling rates below 48 kHz. The second band (24 - 48kHz) is split, delayed and encoded in 8 uniform bands in the same manner as described above for sampling rates between 48-96kHz. The third and fourth bands are processed directly. In order to ensure

that the time waveforms for these bands line up with those for the first and second bands prior to the 4-band recombination filter bank at the decoder, delays must be placed somewhere in the 48 - 72kHz and 72 - 96kHz signal paths. In the 192kHz sampling coding system, both 48 - 72kHz and 72 - 96kHz bands are delayed by 511 samples to match the delay of the 32-band decimation/interpolation filter bank. The two upper bands are encoded and packed with the coded data from the 24 - 48kHz and 0 - 24kHz bands to form the compressed data stream.

On arrival at the decoder, the compressed data stream is unpacked and the codes for both the 32-band decoder (0 - 24kHz region), the 8-band (24 - 48kHz) and the single band decoders (48 - 72kHz and 72 - 96kHz regions) separated out and fed to their respective decoding stages. The single bands are recombined with the 0 - 24kHz and 24 - 48kHz bands using a 256-tap 4-band uniform interpolation filter bank to produce a single PCM digital audio signal with a sampling rate of 192kHz. In the case when it is desirable for the decoder to operate at half the sampling rate of the compressed data stream, this can be conveniently carried out by discarding the encoded data associated with the two upper bands (48 - 72kHz and 72 - 96kHz) and decoding only the 8-subband data (24 - 48kHz) and 32-subband data (0 - 24kHz). In the case when it is desirable for the decoder to operate at one quarter the sampling rate of the compressed data stream, this can be conveniently carried out by discarding the encoded data associated with the two upper bands (48 - 72kHz and 72 - 96kHz) and that for the 8-subband decoder data (24 - 48kHz), decoding only the 32-subband data (0 -24kHz).

The coding strategies discussed above for sampling frequencies greater than 48kHz are the best contemplated at this time. However, the preferred strategy may change as they are actually implemented. The importance of the described strategies is to illustrate the expandability of the encoder architecture and data stream format.

Channel Encoder

In all the coding strategies described, the 32-band encoding/decoding process is carried out for the baseband portion of the audio bandwidth between 0 - 24kHz for either 48kHz, 96kHz or 192kHz sampling frequencies, and thus will be discussed in detail. As shown in **FIG. 5**, a frame grabber **64** windows the PCM audio channel **14** to segment it into successive data frames **66**. The PCM audio window defines the number of contiguous input samples for which the encoding process generates an output frame in the data stream. The window size is set based upon the amount of compression, i.e. the ratio of the transmission rate to the sampling rate, such that the amount of data encoded in each frame is constrained. Each successive data frame **66** is split into 32 uniform frequency bands **68** by a 32-band 512-tap FIR decimation filter bank **34**. The samples output from each subband are buffered and applied to the 32-band coding stage **36**.

An analysis stage **70** (described in detail in **FIGs. 12-24**) generates optimal predictor coefficients, differential quantizer bit allocations and optimal quantizer scale factors for the buffered subband samples. The analysis stage **70** can also decide which subbands will be VQ and which will be joint frequency coded if these decisions are not fixed. This data, or side information, is fed forward to the selected ADPCM stage **72**, VQ stage **73** or Joint Frequency Coding (JFC) stage **74**, and to the data multiplexer **32** (packer). The subband samples are then encoded by the ADPCM or VQ process and the quantization codes input to the multiplexer. The JFC stage **74** does not actually encode subband samples but generates codes that indicate which channels' subbands are joined and where they are placed in the data stream. The quantization codes and the side information from each subband are packed into the data stream **16** and transmitted to the decoder.

On arrival at the decoder **18**, the data stream is demultiplexed **40**, or unpacked, back into the individual

subbands. The scale factors and bit allocations are first installed into the inverse quantizers **75** together with the predictor coefficients for each subband. The differential codes are then reconstructed using either the ADPCM process **76** or the inverse VQ process **77** directly or the inverse JFC process **78** for designated subbands. The subbands are finally amalgamated back to a single PCM audio signal **22** using the 32-band interpolation filter bank **44**.

PCM Signal Framing

As shown in **FIG. 6**, the frame grabber **64** shown in **FIG. 5** varies the size of the window **79** as the transmission rate changes for a given sampling rate so that the number of bytes per output frame **80** is constrained to lie between, for example, 5.3k bytes and 8k bytes. **Tables 1** and **2** are design tables that allow a designer to select the optimum window size and decoder buffer size (frame size), respectively, for a given sampling rate and transmission rate. At low transmission rates the frame size can be relatively large. This allows the encoder to exploit the non-flat variance distribution of the audio signal over time and improve the audio coder's performance. For example, at a sampling rate of 48kHz and a transmission rate of 384kbps the optimum frame size is 4096 samples, which is split into 4 subframes of 1024 samples. At high rates, the frame size is reduced so that the total number of bytes does not overflow the decoder buffer. For example, at a sampling rate of 48kHz and a transmission rate of 2048 kbps, the optimum frame size is 1024 samples, which constitutes a single subframe. As a result, a designer can provide the decoder with 8k bytes of RAM to satisfy all transmission rates. This reduces the cost of the decoder. In general, the size of the audio window is given by:

$$\text{Audio Window} = (\text{Frame Size}) * F_{samp} * \left(\frac{8}{T_{rate}}\right)$$

where Frame Size is the size of the decoder buffer, F_{samp} is

the sampling rate, and T_{rate} is the transmission rate. The size of the audio window is independent of the number of audio channels. However, as the number of channels is increased the amount of compression must also increase to maintain the desired transmission rate.

Table 1

	F_{samp}(kHz)				
T_{rate}	8-12	16-24	32-48	64-96	128-192
≤512kbps	1024	2048	4096	*	*
≤1024kbps	*	1024	2048	*	*
≤2048kbps	*	*	1024	2048	*
≤4096kbps	*	*	*	1024	2048

Table 2

	F_{samp}(kHz)				
T_{rate}	8-12	16-24	32-48	64-96	128-192
<512kbps	8-5.3k	8-5.3k	8-5.3k	*	*
<1024kbps	*	8-5.3k	8-5.3k	*	*
<2048kbps	*	*	8-5.3k	8-5.3k	*
<4096kbps	*	*	*	8-5.3k	8-5.3k

Subband Filtering

The 32-band 512-tap uniform decimation filterbank **34** selects from two polyphase filterbanks to split the data frames **66** into the 32 uniform subbands **68** shown in **FIG. 5**. The two filterbanks have different reconstruction properties that trade off subband coding gain against reconstruction precision. One class of filters is called perfect reconstruction (PR) filters. When the PR decimation (encoding) filter and its interpolation (decoding) filter are placed back-to-back the reconstructed signal is "perfect," where perfect is defined as being within 0.5 lsb at 24 bits of resolution. The other class of filters is

called non-perfect reconstruction (NPR) filters because the reconstructed signal has a non-zero noise floor that is associated with the non-perfect aliasing cancellation properties of the filtering process.

The transfer functions **82** and **84** of the NPR and PR filters, respectively, for a single subband are shown in **FIG. 7**. Because the NPR filters are not constrained to provide perfect reconstruction, they exhibit much larger near stop band rejection (NSBR) ratios, i.e. the ratio of the passband to the first side lobe, than the PR filters (110 dB v. 85 dB). As shown in **FIG. 8**, the sidelobes of the filter cause a signal **86** that naturally lies in the third subband to alias into the neighboring subbands. The subband gain measures the rejection of the signal in the neighboring subbands, and hence indicates the filter's ability to decorrelate the audio signal. Because the NPR filters' have a much larger NSBR ratio than the PR filters they will also have a much larger subband gain. As a result, the NPR filters provide better encoding efficiency.

As shown in **FIG. 9**, the total distortion in the compressed data stream is reduced as the overall bit rate increases for both the PR and NPR filters. However, at low rates the difference in subband gain performance between the two filter types is greater than the noise floor associated with NPR filter. Thus, the NPR filter's associated distortion curve **90** lies below the PR filter's associated distortion curve **92**. Hence, at low rates the audio coder selects the NPR filter bank. At some point **94**, the encoder's quantization error falls below the NPR filter's noise floor such that adding additional bits to the ADPCM coder provides no additional benefits. At this point, the audio coder switches to the PR filter bank.

Although it is possible to switch the filter banks on the fly, the currently preferred, and simpler approach, is to select one filter type to encode the entire audio signal. The selection is roughly based on the total bit rate divided by the number of channels. If the bit rate per channel lies

below the point **94** where the NPR and PR distortion curves cross than the NPR filterbank is selected. Otherwise, the PR filterbank is selected. However, in practice, the crossover point only provides a reference point. For example, a designer may decide to switch to PR filters at a lower rate due to the designer's personal preference or because the particular audio signal has a relatively high transient content. PR filters, by definition, perfectly reconstruct the transient components whereas the NPR filters will introduce transient distortion. Thus, the optimum switching point based on subjective quality may occur at a lower bit rate.

ADPCM Encoding

The operation of the ADPCM encoder **72** is illustrated in **FIG. 10** together with the following algorithmic steps 1-7. The first step is to generate a predicted sample p(n) from a linear combination of H previous reconstructed samples. This prediction sample is then subtracted from the input x(n) to give a difference sample d(n). The difference samples are scaled by dividing them by the RMS (or PEAK) scale factor to match the RMS amplitudes of the difference samples to that of the quantizer characteristic Q. The scaled difference sample ud(n) is applied to a quantizer characteristic with L levels of step-size SZ, as determined by the number of bits ABIT allocated for the current sample. The quantizer produces a level code QL(n) for each scaled difference sample ud(n). These level codes are ultimately transmitted to the decoder ADPCM stage. To update the predictor history, the quantizer level codes QL(n) are locally decoded using an inverse quantizer 1/Q with identical characteristics to that of Q to produce a quantized scaled difference sample $\hat{ud}(n)$. The sample $\hat{ud}(n)$ is rescaled by multiplying it with the RMS (or PEAK) scale factor, to produce $\hat{d}(n)$. A quantized version $\hat{x}(n)$ of the original input sample x(n) is reconstructed by adding the initial prediction sam-

ple p(n) to the quantized difference sample $\hat{d}(n)$. This sample is then used to update the predictor history.

ADPCM Decoding

The operation of the ADPCM decoder **76** is illustrated in **FIG. 11** together with the algorithmic steps 1-4. The first step is to extract the ABIT, RMS (or PEAK) and A_H predictor coefficients from the incoming data stream. Next a predicted sample p(n) is generated from a linear combination of H previous reconstructed samples. During normal operation both the previous reconstructed samples and the predictor coefficients are identical at encoder and decoder. Hence, the predicted samples p(n) are identical. The received quantizer level code QL(n) is inverse quantized using 1/Q. Since the ABIT allocations will be the same at encoder and decoder, the quantized scaled difference samples $\hat{ud}(n)$ are identical to those at the encoder. These samples are rescaled by multiplying it with the RMS (or PEAK) scale factor, producing $\hat{d}(n)$. Again, since the scale factors are equivalent at encoding and decoding ends, the decoded $\hat{d}(n)$ are the same as those at the encoder. The reconstructed samples $\hat{x}(n)$ are finally produced by adding the prediction sample p(n) to the quantized difference sample $\hat{d}(n)$ and are output as the decoded subband samples. As with the encoding ADPCM process, the reconstructed samples are also used to update the predictor history.

In summary, the performance of forward ADPCM coding depends mainly on the scale factor calculation, the bit allocation (ABIT) and the amplitude of the difference samples d(n).

1. The difference sample amplitude must on average be less than the input samples x(n) on average so that it is possible to use fewer quantization levels to code the difference signal with the same signal to quantization noise ratio (SNR). This means that the predictor must be capable

of exploiting periodicity in the input samples.

2. The RMS or PEAK scale factors must be adjusted such that the scaled difference sample amplitudes are optimally matched to the input range of the quantizer to maximize the SNR of the reconstructed samples $\hat{x}(n)$ for any given bit allocation ABIT. If the scale factor is over estimated, the difference samples will tend to utilize only the lower quantizer levels, and hence result in sub-optimal SNR values. If the scale factors are under estimated, the quantizer range will not adequately cover the difference samples excursions and the occurrence of clipping will rise, leading also to a reduction in the reconstruction SNR.

3. The bit allocation ABIT determines the number of quantizer steps and the step-size within any characteristic, and hence the quantization noise level induced in the reconstructed signal (assuming optimal scaling). Generally speaking, the reconstruction SNR rises by approximately 6dB for every doubling in the number of quantization levels.

Vector Quantization

Vector Quantization Principles

The high frequency subband samples as well as the predictor coefficients are encoded using vector quantization (VQ). The VQ start subband can be fixed or may vary dynamically as a function of signal characteristics. VQ works by allocating codes for a group, or vector, of input samples, rather than operating on the individual samples. According to Shannon's theory, better performance/bit-rate ratios can always be obtain by coding in vectors.

The encoding of an input sample vector in a VQ is essentially a pattern matching process. The input vector is compared with all the patterns (codevectors) from a designed database (codebook). The closest match is then selected to represent the input vector based on one of several popular criteria such as mse that measure similarity. By sending the address of the matching codevector in the codebook rather than the vector itself the bit rate can be reduced.

The decoding process of VQ is simply to retrieve the closest match codevector from the same codebook using the received address. The final codebook size M (number of codevectors) is related to the vector dimension N (number of samples in a codevector), and bit rate r as $M = 2^{Nr}$.

Both N and r can be increased to improve the performance of a VQ system. The cost, however, is a much larger codebook, which means a more intense computation and memory requirement in its implementation. Although a wide range of techniques exist for codebook generation, to reduce computational complexity while maintaining design performance the following assumptions were used the design of each VQ codebook (predictor coefficient VQ and high frequency VQ):

a) Vectors in both VQ are viewed as patterns regardless of the nature of samples in order to simplify the design;

b) A MSE distortion measure is used as the similarity criterion;

c) Tree search techniques are used to reduce encoding computations; and

d) Adequate bit rates are given to maintain the designed performance.

Design of Predictor Coefficient VQ Codebook

The predictor VQ has a vector dimension of 4 samples and a bit rate of 3 bits per sample. The final codebook therefore consists of 4096 codevectors of dimension 4. The search of matching vectors is structured as a two level tree with each node in the tree having 64 branches. The top level stores 64 node codevectors which are only needed at the encoder to help the searching process. The bottom level contacts 4096 final codevectors, which are required at both the encoder and the decoder. For each search, 128 MSE computations of dimension 4 are required. The codebook and the node vectors at the top level are trained using the LBG

method, with over 5 million prediction coefficient training vectors. The training vectors are accumulated for all subband which exhibit a positive prediction gain while coding a wide range of audio material. For test vectors in a training set, average SNRs of approximately 30dB are obtained.

Design of High Frequency Subband Sample VQ Codebook

The high frequency VQ has a vector dimension of 32 samples (the length of a subframe) and a bit rate of 0.3125 bits per sample. The final codebook therefore consists of 1024 codevectors of dimension 32. The search of matching vectors is structured as a two level tree with each node in the tree having 32 branches. The top level stores 32 node codevectors, which are only needed at the encoder. The bottom level contains 1024 final codevectors which are required at both the encoder and the decoder. For each search, 64 MSE computations of dimension 32 are required. The codebook and the node vectors at the top level are trained using the LBG method with over 7 million high frequency subband sample training vectors. The samples which make up the vectors are accumulated from the outputs of subbands 16 through 32 for a sampling rate of 48 kHz for a wide range of audio material. At a sampling rate of 48kHz, the training samples represent audio frequencies in the range 12 to 24 kHz. For test vectors in the train set, an average SNR of about 3dB is expected.

Although 3dB is a small SNR, it is sufficient to provide high frequency fidelity or ambiance at these high frequencies. It is perceptually much better than the known techniques which simple drop the high frequency subbands.

Joint Frequency Coding

In very low bit rate applications overall reconstruction fidelity can be improved by coding only a summation of high frequency subband signals from two or more audio channels instead of coding them independently. Joint

frequency coding is possible because the high frequency subbands oftentimes have similar energy distributions and because the human auditory system is sensitive primarily to the "intensity" of the high frequency components, rather than their fine structure. Thus, the reconstructed average signal provides good overall fidelity since at any bit rate more bits are available to code the perceptually important low frequencies.

As shown in **FIGs. 12a** and **12b**, the frequency responses **150** and **151** of two audio channels have very similar shapes above 10kHz. Thus, the lower 16 subbands **152** and **153** shown in **FIGs. 12c** and **12d**, respectively, are encoded separately and the averaged upper 16 subbands **154** shown in **FIG. 12e** are encoded using either the ADPCM or VQ encoding algorithms. Joint frequency coding indexes (JOINX) are transmitted directly to the decoder to indicate which channels and subbands have been joined and where the encoded signal is positioned in the data stream. The decoder reconstructs the signal in the designated channel and then copies it to each of the other channels. Each channel is then scaled in accordance with its particular RMS scale factor. Because joint frequency coding averages the time signals based on the similarity of their energy distributions, the reconstruction fidelity is reduced. Therefore, its application is typically limited to low bit rate applications and mainly to the 10-20kHz signals. In the medium to high bit rate applications joint frequency coding is typically disabled.

Subband Encoder

The encoding process for a single sideband that is encoded using the ADPCM/APCM processes, and specifically the interaction of the analysis stage **70** and ADPCM coder **72** shown in **FIG. 5** and the global bit management system **30** shown in **FIG. 2**, is illustrated in detail in **FIG. 13**. **FIGs. 14-24** detail the component processes shown in **FIG.**

13. The filterbank **34** splits the PCM audio signal **14** into 32 subband signals x(n) that are written into respective subband sample buffers **96**. Assuming a audio window size of 4096 samples, each subband sample buffer **96** stores a complete frame of 128 samples, which are divided into 4 32-sample subframes. A window size of 1024 samples would produce a single 32-sample subframe. The samples x(n) are directed to the analysis stage **70** to determine the prediction coefficients, the predictor mode (PMODE), the transient mode (TMODE) and the scale factors (SF) for each subframe. The samples x(n) are also provided to the GBM system **30**, which determines the bit allocation (ABIT) for each subframe per subband per audio channel. Thereafter, the samples x(n) are passed to the ADPCM coder **72** a subframe at a time.

Estimation of Optimal Prediction Coefficients

The H, suitably 4th order, prediction coefficients are generated separately for each subframe using the standard autocorrelation method **98** optimized over a block of subband samples x(n), i.e. the Weiner-Hopf or Yule-Walker equations. The analysis block may be overlapped with previous blocks and/or windowed using a function such as a Hamming or Blackman window. Windowing reduces the sample amplitudes at the block edges in order to improve the frequency resolution of the block. In a 4096 PCM sample coding window where the signal is decimated into 128 samples per subband, the subband predictor coefficients are updated and transmitted to the decoder for each of the four subframes.

Quantization of Optimal Prediction Coefficients

Each set of four predictor coefficients is preferably quantized using a 4-element tree-search 12-bit vector codebook (3 bits per coefficient) described above. The 12-bit vector codebook contains 4096 coefficient vectors that are optimized for a desired probability distribution using a standard clustering algorithm. A vector quantization (VQ) search **100** selects the coefficient vector which exhibits the

lowest weighted mean squared error between itself and the optimal coefficients. The optimal coefficients for each subframe are then replaced with these "quantized" vectors. An inverse VQ LUT **101** is used to provide the quantized predictor coefficients to the ADPCM coder **72**.

Alternately, the codebook may contain a range of PARCOR vectors where the matching procedure aims to locate the vector which exhibits the lowest weighted mean squared error between itself and the PARCOR representation of the optimal predictor coefficients. The minimal PARCOR vector is then converted back to quantized predictor coefficients which are used locally in the ADPCM loops. The PARCOR-to-quantized prediction coefficient conversion is best achieved using another look-up table to ensure that the prediction coefficient values are identical to those in the decoder look-up table. As another alternative, the quantizer table may contain a range of log-area vectors where the matching procedure aims to locate the vector which exhibits the lowest weighted mean squared error between itself and the log-area representation of the optimal coefficients. The minimal log-area vector is then converted back to quantized predictor coefficients which are used locally in the ADPCM loops. The log-area to quantized prediction coefficient conversion is best achieved using another look-up table to ensure that the coefficient values are identical to those in the decoder look-up table.

In all cases the respective code book addresses PVQ are transmitted to the decoder where they will be used to extract identical prediction coefficient vectors using a locally resident vector table. These predictor coefficients will be used in the decoding ADPCM loops.

Estimation of Prediction Difference Signal d(n)

A significant quandary with ADPCM is that the difference sample sequence d(n) cannot be easily predicted ahead of the actual recursive process **72** illustrated in **FIGs. 10** and **13**. A fundamental requirement of forward

adaptive subband ADPCM is that the difference signal energy be known ahead of the ADPCM coding in order to calculate an appropriate bit allocation for the quantizer which will produce a known quantization error, or noise level in the reconstructed samples. Knowledge of the difference signal energy is also required to allow an optimal difference scale factor to be determined prior to encoding.

Unfortunately, the difference signal energy not only depends on the characteristics of the input signal but also on the performance of the predictor. Apart from the known limitations such as the predictor order and the optimality of the predictor coefficients, the predictor performance is also affected by the level of quantization error, or noise, induced in the reconstructed samples. Since the quantization noise is dictated by the final bit allocation ABIT and the difference scale factor RMS (or PEAK) values themselves, the difference signal energy estimate must be arrived at iteratively **102**.

Step 1. Assume Zero Quantization Error

The first difference signal estimation is made by passing the buffered subband samples x(n) through an ADPCM process which does not quantize the difference signal. This is accomplished by disabling the quantization and RMS scaling in the ADPCM encoding loop. By estimating the difference signal d(n) in this way, the effects of the scale factor and the bit allocation values are removed from the calculation. However, the effect of the quantization error on the predictor coefficients is taken into account by the process by using the vector quantized prediction coefficients. An inverse VQ LUT **104** is used to provide the quantized prediction coefficients. To further enhance the accuracy of the estimate predictor, the history samples from the actual ADPCM predictor that were accumulated at the end of the previous block are copied into the predictor prior to the calculation. This ensures that the predictor starts off from where the real ADPCM predictor left off at the end of

the previous input buffer.

The main discrepancy between this estimate ed(n) and the actual process d(n) is that the effect of quantization noise on the reconstructed samples x(n) and on the reduced prediction accuracy is ignored. For quantizers with a large number of levels the noise level will generally be small (assuming proper scaling) and therefore the actual difference signal energy will closely match that calculated in the estimate. However, when the number of quantizer levels is small, as is the case for typical low bit rate audio coders, the actual predicted signal, and hence the difference signal energy, may differ significantly from the estimated one. This produces coding noise floors that are different from those predicted earlier in the adaptive bit allocation process.

Despite this, the variation in prediction performance may not be significant for the application or bit rate. Thus, the estimate can be used directly to calculate the bit allocations and the scale factors without iterating. An additional refinement would be to compensate for the performance loss by deliberately over-estimating the difference signal energy if it is likely that a quantizer with a small number of levels is to be allocated to that subband. The over-estimation may also be graded according to the changing number of quantizer levels for improved accuracy.

Step 2. Recalculate using Estimated Bit Allocations and Scale Factors

Once the bit allocations (ABIT) and scale factors (SF) have been generated using the first estimation difference signal, their optimality may be tested by running a further ADPCM estimation process using the estimated ABIT and RMS (or PEAK) values in the ADPCM loop **72**. As with the first estimate, the estimate predictor history is copied from the actual ADPCM predictor prior to starting the calculation to ensure that both predictors start from the same point. Once

the buffered input samples have all passed through this second estimation loop, the resulting noise floor in each subband is compared to the assumed noise floor in the adaptive bit allocation process. Any significant discrepancies can be compensated for by modifying the bit allocation an d/or scale factors.

Step 2 can be repeated to suitably refine the distributed noise floor across the subbands, each time using the most current difference signal estimate to calculate the next set of bit allocations and scale factors. In general, if the scale factors would change by more than approximately 2-3 dB, then they are recalculated. Otherwise the bit allocation would risk violating the signal-to-mask ratios generating by the psychoacoustic masking process, or alternately the mmse process. Typically, a single iteration is sufficient.

Calculation of Subband Prediction Modes (PMODE)

To improve the coding efficiency, a controller **106** can arbitrarily switch the prediction process off when the prediction gain in the current subframe falls below a threshold by setting a PMODE flag. The PMODE flag is set to one when the prediction gain (ratio of the input signal energy and the estimated difference signal energy), measured during the estimation stage for a block of input samples, exceeds some positive threshold. Conversely, if the prediction gain is measured to be less than the positive threshold the ADPCM predictor coefficients are set to zero at both encoder and decoder, for that subband, and the respective PMODE is set to zero. The prediction gain threshold is set such that it equals the distortion rate of the transmitted predictor coefficient vector overhead. This is done in an attempt to ensure that when PMODE=1, the coding gain for the ADPCM process is always greater than or equal to that of a forward adaptive PCM (APCM) coding process. Otherwise by setting PMODE to zero and resetting the predictor coefficients, the ADPCM process simply reverts to APCM.

e PMODEs can be set high in any or all subbands if the A[illegible]M coding gain variations are not important to the application. Conversely, the PMODES can be set low if, for example, certain subbands are not going to be coded at all, the bit rate of the application is high enough that prediction gains are not required to maintain the subjective quality of the audio, the transient content of the signal is high, or the splicing characteristic of ADPCM encoded audio is simply not desirable, as might be the case for audio editing applications.

Separate prediction modes (PMODEs) are transmitted for each subband at a rate equal to the update rate of the linear predictors in the encoder and decoder ADPCM processes. The purpose of the PMODE parameter is to indicate to the decoder if the particular subband will have any prediction coefficient vector address associated with its coded audio data block. When PMODE=1 in any subband then a predictor coefficient vector address will always be included in the data stream. When PMODE=0 in any subband then a predictor coefficient vector address will never be included in the data stream and the predictor coefficients are set to zero at both encoder and decoder ADPCM stages.

The calculation of the PMODEs begins by analyzing the buffered subband input signal energies with respect to the corresponding buffered estimated difference signal energies obtained in the first stage estimation, i.e. assuming no quantization error. Both the input samples x(n) and the estimated difference samples ed(n) are buffered for each subband separately. The buffer size equals the number of samples contained in each predictor update period, e.g. the size of a subframe. The prediction gain is then calculated as:

$$P_{gain} \text{ (dB)} = 20.0 * \text{Log}_{10}(RMS_{x(n)} / RMS_{ed(n)})$$

where $RMS_{x(n)}$ = root mean square value of the buffered input samples x(n) and $RMS_{ed(n)}$ = root mean square value of the buffered estimated difference samples ed(n).

For positive prediction gains, the difference signal is, on average, smaller than the input signal, and hence a reduced reconstruction noise floor may be attainable using the ADPCM process over APCM for the same bit rate. For negative gains, the ADPCM coder is making the difference signal, on average, greater than the input signal, which results in higher noise floors than APCM for the same bit rate. Normally, the prediction gain threshold, which switches PMODE on, will be positive and will have a value which takes into account the extra channel capacity consumed by transmitting the predictor coefficients vector address.

For example, if the predictors were updated every 50ms by transmitting a 12-bit prediction coefficient vector, then for a 32-band filter bank the predictor overhead in each subband for which PMODE=1 is 12 bits/75 samples, or 0.16 bits per sample. Theoretically the loss of 0.16 bits per subband sample translates to an average increase in noise in the reconstructed subband samples of approximately 1dB (assuming linear quantization). Hence, the prediction gain threshold in this example would be at least 1dB in an attempt to keep the predictor off during periods when differential coding gains are not possible. Higher thresholds may be necessary if, for example, the differential scale factor quantizer cannot accurately resolve the scale factors.

As discussed earlier, it may be desirable to estimate the difference signal energy more than once (i.e. use Step 2) in order to better predict the interaction between the quantization noise and the predictor performance with the ADPCM loop. Likewise, the validity of the PMODE flag can also be rechecked at the same time. This would ensure that any subband, which experiences a loss in prediction gain as a result of using the quantizer requested by the bit allocation such that the new gain value fell below the threshold, will have its PMODE reset to zero.

Calculation of Subband Transient Modes (TMODE)

The controller **106** calculates the transient modes (TMODE) for each subframe in each subband. The TMODEs indicate the number of scale factors and the samples in the estimated difference signal ed(n) buffer when PMODE=1 or in the input subband signal x(n) buffer when PMODE=0, for which they are valid. The TMODEs are updated at the same rate as the prediction coefficient vector addresses and are transmitted to the decoder. The purpose of the transient modes is to reduce audible coding "pre-echo" artifacts in the presence of signal transients.

A transient is defined as a rapid transition between a low amplitude signal and a high amplitude signal. Because the scale factors are averaged over a block of subband difference samples, if a rapid change in signal amplitude takes place in a block, i.e. a transient occurs, the calculated scale factor tends to be much larger than would be optimal for the low amplitude samples preceding the transient. Hence, the quantization error in samples preceding transients can be very high. This noise is perceived as pre-echo distortion.

In practice, the transient mode is used to modify the subband scale factor averaging block length to limit the influence of a transient on the scaling of the differential samples immediately preceding it. The motivation for doing this is the pre-masking phenomena inherent in the human auditory system, which suggests that in the presence of transients noise can be masked prior to a transient provided that its duration is kept short.

Depending on the value of PMODE either the contents, i.e. the subframe, of the subband sample buffer x(n) or that of the estimated difference buffer ed(n) are copied into a transient analysis buffer. Here the buffer contents are divided uniformly into either 2, 3 or 4 sub-subframes depending on the sample size of the analysis buffer. For example, if the analysis buffer contains 32 subband samples (21.3ms @1500Hz), the buffer is partitioned into 4 sub-subfr

ames of 8 samples each, giving a time resolution of 5.3ms for a subband sampling rate of 1500Hz. Alternately, if the analysis window was configured at 16 subband samples, then the buffer need only be divided into two sub-subframes to give the same time resolution.

The signal in each sub-subframe is analyzed and the transient status of each, other than the first, is determined. If any sub-subframes are declared transient, two separate scale factors are generated for the analysis buffer, i.e. the current subframe. The first scale factor is calculated from samples in the sub-subframes preceding the transient sub-subframe. The second scale factor is calculated from samples in the transient sub-subframe together with all proceeding sub-subframes.

The transient status of the first sub-subframe is not calculated since the quantization noise is automatically limited by the start of the analysis window itself. If more than one sub-subframe is declared transient, then only the one which occurs first is considered. If no transient sub-buffers are detected at all, then only a single scale factor is calculated using all of the samples in the analysis buffer. In this way scale factor values which include transient samples are not used to scale earlier samples more than a sub-subframe period back in time. Hence, the pre-transient quantization noise is limited to a sub-subframe period.

Transient Declaration

A sub-subframe is declared transient if the ratio of its energy over the preceding sub-buffer exceeds a transient threshold (TT), and the energy in the preceding sub-subframe is below a pre-transient threshold (PTT). The values of TT and PTT will depend on the bit rate and the degree of pre-echo suppression required. They are normally varied until perceived pre-echo distortion matches the level of other coding artifacts if they exist. Increasing TT and/or decreasing PTT values will reduce the likelihood of sub-subf

rames being declared transient, and hence will reduce the bit rate associated with the transmission of the scale factors. Conversely, reducing TT and/or increasing PTT values will increase the likelihood of sub-subframes being declared transient, and hence will increase the bit rate associated with the transmission of the scale factors.

Since TT and PTT are individually set for each subband, the sensitivity of the transient detection at the encoder can be arbitrarily set for any subband. For example, if it is found that pre-echo in high frequency subbands is less perceptible than in lower frequency subbands, then the thresholds can be set to reduce the likelihood of transients being declared in the higher subbands. Moreover, since TMODEs are embedded in the compressed data stream, the decoder never needs to know the transient detection algorithm in use at the encoder in order to properly decode the TMODE information.

Two Sub-buffer Configuration

If the first sub-buffer is declared transient or if no transient sub-buffers are detected, then TMODE=0. Otherwise TMODE=1.

Three Sub-buffer Configuration

If the first sub-buffer is transient, or if no transient sub-buffers are detected, then TMODE=0. If the second sub-buffer is transient but not the first, then TMODE=1. If only the third sub-buffer is transient then TMODE=2.

Four Sub-buffer Configuration

As shown in **FIG. 14a**, if the first sub-subframe **108** in the subband analysis buffer **109** is transient, or if no transient sub-subframes are detected, then TMODE=0. If the second sub-subframe is transient but not the first, then TMODE=1. If the third sub-subframe is transient but not the first or second, then TMODE=2. If only the fourth sub-subfra

me is transient then TMODE=3.

Calculation of Scale Factors

As shown in **FIG. 16b**, when TMODE=0 the scale factors **110** are calculated over all sub-subframes. When TMODE=1, the first scale factor is calculated over the first sub-subframe and the second scale factor over all proceeding sub-subframes. When TMODE=2 the first scale factor is calculated over the first and second sub-subframes and the second scale factor over all proceeding sub-subframes. When TMODE=3 the first scale factor is calculated over the first, second and third sub-subframes and the second scale factor is calculated over the fourth sub-subframe.

ADPCM Encoding and Decoding using TMODE

When TMODE=0 the single scale factor is used to scale the subband difference samples for the duration of the entire analysis buffer, i.e. a subframe, and is transmitted to the decoder to facilitate inverse scaling. When TMODE>0 then two scale factors are used to scale the subband difference samples and both transmitted to the decoder. For any TMODE, each scale factor is used to scale the differential samples used to generate the it in the first place.

Calculation of Subband Scale Factors (RMS or PEAK)

Depending on the value of PMODE for that subband, either the estimated difference samples ed(n) or input subband samples x(n) are used to calculate the appropriate scale factor(s). The TMODEs are used in this calculation to determine both the number of scale factors and to identify the corresponding sub-subframes in the buffer.

RMS scale factor calculation

For the jth subband, the rms scale factors are calculated as follows:

When TMODE=0 then the single rms value is;

$$RMS_j = \left(\sum_{n=1}^{L} ed(n)^2 / L \right)^{0.5}$$

where L is the number of samples in the subframe.

When TMODE >0 then the two rms values are;

$$RMS1_j = \left(\sum_{n=1}^{k} ed(n)^2 / L \right)^{0.5}$$

$$RMS2_j = \left(\sum_{n=1}^{k+1} ed(n)^2 / L \right)^{0.5}$$

where k =(TMODE*L/NSB) and NSB is the number of uniform sub-subframes.

If PMODE=0 then the $ed_j(n)$ samples are replaced with the input samples $x_j(n)$.

PEAK scale factor calculation

For the jth subband, the peak scale factors are calculated as follows;

When TMODE=0 then the single peak value is;

$PEAK_j$ = MAX(ABS($ed_j(n)$)) for n=1, L

When TMODE>0 then the two peak values are;

$PEAK1_j$ = MAX(ABS($ed_j(n)$)) for n=1, (TMODE*L/NSB)

$PEAK2_j$ = MAX(ABS($ed_j(n)$)) for n=(1+TMODE*L/NSB), L

If PMODE=0 then the $ed_j(n)$ samples are replaced with the input samples $x_j(n)$.

Quantization of PMODE, TMODE and Scale Factors

Quantization of PMODEs

The prediction mode flags have only two values, on or off, and are transmitted to the decoder directly as 1-bit codes.

Quantization of TMODEs

The transient mode flags have a maximum of 4 values; 0, 1, 2 and 3, and are either transmitted to the decoder

directly using 2-bit unsigned integer code words or optionally via a 4-level entropy table in an attempt to reduce the average word length of the TMODEs to below 2 bits. Typically the optional entropy coding is used for low-bit rate applications in order to conserve bits.

The entropy coding process **112** illustrated in detail in **FIG. 15** is as follows; the transient mode codes TMODE(j) for the j subbands are mapped to a number (p) of 4-level mid-riser variable length code book, where each code book is optimized for a different input statistical characteristic. The TMODE values are mapped to the 4-level tables **114** and the total bit usage associated with each table (NB_p) is calculated **116**. The table that provides the lowest bit usage over the mapping process is selected **118** using the THUFF index. The mapped codes, VTMODE(j), are extracted from this table, packed and transmitted to the decoder along with the THUFF index word. The decoder, which holds the same set of 4-level inverse tables, uses the THUFF index to direct the incoming variable length codes, VTMODE(j), to the proper table for decoding back to the TMODE indexes.

Quantization of Subband Scale Factors

In order to transmit the scale factors to the decoder they must be quantized to a known code format. In this system they are quantized using either a uniform 64-level logarithmic characteristic, a uniform 128-level logarithmic characteristic, or a variable rate encoded uniform 64-level logarithmic characteristic **120**. The 64-level quantizer exhibits a 2.25dB step-size in both cases, and the 128-level a 1.25dB step-size. The 64-level quantization is used for low to medium bit-rates, the additional variable rate coding is used for low bit-rate applications, and the 128-level is generally used for high bit-rates.

The quantization process **120** is illustrated in **FIG. 16**. The scale factors, RMS or PEAK, are read out of a buffer **121**, converted to the log domain **122**, and then applied either to a 64-level or 128-level uniform quantizers

124, 126 as determined by the encoder mode control **128**. The log quantized scale factors are then written into a buffer **130**. The range of the 128 and 64-level quantizers are sufficient to cover scale factors with a dynamic range of approximately 160dB and 144dB, respectively. The 128-level upper limit is set to cover the dynamic range of 24-bit input PCM digital audio signals. The 64-level upper limit is set to cover the dynamic range of 20-bit input PCM digital audio signals.

The log scale factors are mapped to the quantizer and the scale factor is replaced with the nearest quantizer level code RMS_{QL} (or $PEAK_{QL}$). In the case of the 64-level quantizer these codes are 6-bits long and range between 0-63. In the case of the 128-level quantizer, the codes are 7-bits long and range between 0-127.

Inverse quantization **131** is achieved simply by mapping the level codes back to the respective inverse quantization characteristic to give RMS_q (or $PEAK_q$) values. Quantized scale factors are used both at the encoder and decoder for the ADPCM (or APCM if PMODE=0) differential sample scaling, thus ensuring that both scaling and inverse scaling processes are identical.

If the bit-rate of the 64-level quantizer codes needs to be reduced, additional entropy, or variable length coding is performed. The 64-level codes are first order differentially encoded **132** across the j subbands, starting at the second subband (j=2) to the highest active subband. The process can also be used to code PEAK scale factors. The signed differential codes $DRMS_{QL}(j)$, (or $DPEAK_{QL}(j)$) have a maximum range of +/-63 and are stored in a buffer **134**. To reduce their bit rate over the original 6-bit codes, the differential codes are mapped to a number (p) of 127-level mid-riser variable length code books. Each code book is optimized for a different input statistical characteristic.

This process is illustrated in **FIG. 17** using the differential log RMS level codes. The differential level codes

are mapped to (p) 127-level tables **136** and the total bit usage associated with each table (NB_p) is calculated **138**. The table which provides the lowest bit usage over the mapping process is selected **140** using the SHUFF index. The mapped codes $VDRMS_{QL}(j)$ are extracted from this table, packed and transmitted to the decoder along with the SHUFF index word. The decoder, which holds the same set of (p) 127-level inverse tables, uses the SHUFF index to direct the incoming variable length codes to the proper table for decoding back to differential quantizer code levels. The differential code levels are returned to absolute values using the following routines;

$$RMS_{QL}(1) = DRMS_{QL}(1)$$

$$RMS_{QL}(j) = DRMS_{QL}(j) + RMS_{QL}(j-1) \text{ for } j=2, \ldots K$$

and PEAK differential code levels are returned to absolute values using the following routines;

$$PEAK_{QL}(1) = DPEAK_{QL}(1)$$

$$PEAK_{QL}(j) = DPEAK_{QL}(j) + PEAK_{QL}(j-1) \text{ for } j=2, \ldots K$$

where in both cases K = number of active subbands.

Global Bit Allocation

The Global Bit Management system **30** shown in **FIG. 13** manages the bit allocation (ABIT), determines the number of active subbands (SUBS) and the joint frequency strategy (JOINX) and VQ strategy for the multi-channel audio encoder to provide subjectively transparent encoding at a reduced bit rate. This increases the number of audio channels an d/or the playback time that can be encoded and stored on a fixed medium while maintaining or improving audio fidelity. In general, the GBM system **30** first allocates bits to each

subband according to a psychoacoustic analysis modified by the prediction gain of the encoder. The remaining bits are then allocated in accordance with a mmse scheme to lower the overall noise floor. To optimize encoding efficiency, the GBM system simultaneously allocates bits over all of the audio channels, all of the subbands, and across the entire frame. Furthermore, a joint frequency coding strategy can be employed. In this manner, the system takes advantage of the non-uniform distribution of signal energy between the audio channels, across frequency, and over time.

Psychoacoustic Analysis

Psychoacoustic measurements are used to determine perceptually irrelevant information in the audio signal. Perceptually irrelevant information is defined as those parts of the audio signal which cannot be heard by human listeners, and can be measured in the time domain, the frequency domain, or in some other basis. J.D. Johnston: "Transform Coding of Audio Signals Using Perceptual Noise Criteria" IEEE Journal on Selected Areas in Communications, vol JSAC-6, no. 2, pp. 314-323, Feb. 1988 described the general principles of psychoacoustic coding.

Two main factors influence the psychoacoustic measurement. One is the frequency dependent absolute threshold of hearing applicable to humans. The other is the masking effect that one sound has on the ability of humans to hear a second sound played simultaneously or even after the first sound. In other words the first sound prevents us from hearing the second sound, and is said to mask it out.

In a subband coder the final outcome of a psychoacoustic calculation is a set of numbers which specify the inaudible level of noise for each subband at that instant. This computation is well known and is incorporated in the MPEG 1 compression standard ISO/IEC DIS 11172 "Information technology - Coding of moving pictures and associated audio for digital storage media up to about 1.5 Mbits/s," 1992. These numbers vary dynamically with the audio signal. The

coder attempts to adjust the quantization noise floor in the subbands by way of the bit allocation process so that the quantization noise in these subbands is less than the audible level.

An accurate psychoacoustic calculation normally requires a high frequency resolution in the time-to-frequenc y transform. This implies a large analysis window for the time-to-frequency transform. The standard analysis window size is 1024 samples which corresponds to a subframe of compressed audio data. The frequency resolution of a length 1024 fft approximately matches the temporal resolution of the human ear.

The output of the psychoacoustic model is a signal-to-mask (SMR) ratio for each of the 32 subbands. The SMR is indicative of the amount of quantization noise that a particular subband can endure, and hence is also indicative of the number of bits required to quantize the samples in the subband. Specifically, a large SMR (>>1) indicates that a large number of bits are required and a small SMR (>0) indicates that fewer bits are required. If the SMR < 0 then the audio signal lies below the noise mask threshold, and no bits are required for quantization.

As shown in **FIG. 18**, the SMRs for each successive frame are generated, in general, by 1) computing an fft, preferably of length 1024, on the PCM audio samples to produce a sequence of frequency coefficients **142**, 2) convolving the frequency coefficients with frequency dependent tone and noise psychoacoustic masks **144** for each subband, 3) averaging the resulting coefficients over each subband to produce the SMR levels, and 4) optionally normalizing the SMRs in accordance with the human auditory response **146** shown in **FIG. 19**.

The sensitivity of the human ear is a maximum at frequencies near 4kHz and falls off as the frequency is increased or decreased. Thus, in order to be perceived at the same level, a 20kHz signal must be much stronger than a 4kHz signal. Therefore, in general, the SMRs at frequencies near

4kHz are relatively more important than the outlying frequencies. However, the precise shape of the curve depends on the average power of the signal delivered to the listener. As the volume increases, the auditory response **146** is compressed. Thus, a system optimized for a particular volume will be suboptimal at other volumes. As a result, either a nominal power level is selected for normalizing the SMR levels or normalization is disabled. The resulting SMRs **148** for the 32 subbands are shown in **FIG. 20**.

The specific steps for calculating the SMRs **148** are given as follows:

1 The audio signal is transformed from time domain amplitude values into frequency domain coefficients, (magnitude + phase representation).

2 Predicted values for the coefficients are calculated based on an analysis of previous values. An unpredictability measure for each coefficient is calculated based on the difference between the actual and predicted values.

3 The linear frequency coefficients are mapped to critical band coefficients, linear in Barks.

1 The energy in each critical band is determined.

1 The unpredictability of each critical band weighted by its energy is determined.

2 The energy of each critical band is 'spread' over all other frequency coefficients.

3 The energy weighted unpredictability of each critical band is 'spread' over all other frequency coefficients.

4 The 'spreading function' calculates the ability of a signal at one frequency to mask a signal at another frequency. This is calculated as a fraction of energy that is 'spread' from one coefficient (the masker) to another (the masked). The fraction of energy becomes the audible noise floor at the masked coefficient below which the masked signal cannot be heard. The spreading function takes into account the 'frequency' distance between the

masker and masked coefficients (in Barks), on whether the masker is at a lower or higher frequency than the masked signal, and on the amplitude of the masking coefficient. The spread energy at each frequency can be summed linearly or nonlinearly.

5 A tonality index is generated for each critical band.

6 The signal to noise ratio, and power ratio of each critical band is calculated. These are affected by the tonality of each critical band, and on the differing abilities of pure tones to mask noise and noise to mask pure tones.

7 The actual noise energy threshold for each critical band is calculated, taking into account the absolute threshold of hearing for that frequency.

8 The critical band noise threshold is converted to subband noise thresholds.

9 The final outcome is a signal-to-noise mask ratio (SMR) for each critical band which can be used to determine the minimum bit allocation for each subband that will produce an inaudible amount of quantization noise.

This calculation can be simplified by grouping coefficients into a smaller number of wider bandwidth subbands. The subbands could be non-uniform in frequency bandwidth, and could be based on 'critical bark' bands. The tonality of the frequency coefficients can also be calculated in different ways, e.g. directly from the prediction gain within each subband, or by a direct analysis of the magnitude differences between neighboring frequency coefficients (individually or grouped within critical bands). The prediction gain within each subband can be mapped to a set of tonality ratios such that a sine wave and white noise in any subband produce prediction gains that have tonality ratios of 1.0 and 0.0 respectively.

Bit Allocation Routine

The GBM system **30** first selects the appropriate encoding strategy, which subbands will be encoded with the VQ and

ADPCM algorithms and whether JFC will be enabled. Thereafter, the GBM system selects either a psychoacoustic or a MMSE bit allocation approach. For example, at high bit rates the system may disable the psychoacoustic modeling and use a true mmse allocation scheme. This reduces the computational complexity without any perceptual change in the reconstructed audio signal. Conversely, at low rates the system can activate the joint frequency coding scheme discussed above to improve the reconstruction fidelity at lower frequencies. The GBM system can switch between the normal psychoacoustic allocation and the mmse allocation based on the transient content of the signal on a frame-by-frame basis. When the transient content is high, the assumption of stationarity that is used to compute the SMRs is no longer true, and thus the mmse scheme provides better performance.

For a psychoacoustic allocation, the GBM system first allocates the available bits to satisfy the psychoacoustic effects and then allocates the remaining bits to lower the overall noise floor. The first step is to determine the SMRs for each subband for the current frame as described above. The next step is to adjust the SMRs for the prediction gain (Pgain) in the respective subbands to generate mask-to-noise rations (MNRs). The principle being that the ADPCM encoder will provide a portion of the required SMR. As a result, inaudible psychoacoustic noise levels can be achieved with fewer bits.

The MNR for the jth subband, assuming PMODE=1, is given by:

$$MNR(j) = SMR(j) - Pgain(j)*PEF(ABIT)$$

where PEF(ABIT) is the prediction efficiency factor of the quantizer as shown in **Table 3**. To calculate MNR(j), the designer must have an estimate of the bit allocation (ABIT), which can be generated by either allocating bits solely based on the SMR(j) or by assuming that PEF(ABIT)=1. At medium to high bit rates, the effective prediction gain is approximately equal to the calculated prediction gain.

However, at low bit rates the effective prediction gain is reduced. The effective prediction gain that is achieved using, for example, a 5-level quantizer is approximately 0.7 of the estimated prediction gain, while a 65-level quantizer allows the effective prediction gain to be approximately equal to the estimated prediction gain, PEF = 1.0. In the limit, when the bit rate is zero, predictive encoding is essentially disabled and the effective prediction gain is zero.

Table 3

PEF v. Quantization levels

Q levels	ABIT index	SNR[dB]	PEF(ABIT)
0	0	0	0.00
3	1	9	0.65
5	2	12	0.70
7	3	15	0.75
9	4	18	0.80
13	5	21	0.85
17	6	24	0.90
25	7	27	0.95
33	8	30	1.00
65	9	36	1.00
129	10	42	1.00
256	11	48	1.00
512	12	54	1.00
1024	13	60	1.00
2048	14	66	1.00
4096	15	72	1.00
8192	16	78	1.00
16384	17	84	1.00
32768	18	90	1.00
65536	19	96	1.00
131072	20	102	1.00
262144	21	108	1.00
524288	22	114	1.00

Table 3 (cont.)

1048576	23	120	1.00
2097152	24	126	1.00
4194304	25	132	1.00
8388608	26	138	1.00
16777216	27	144	1.00

In the next step, the GBM system **30** generates a bit allocation scheme that satisfies the MNR for each subband. This is done using the approximation that 1 bit equals 6dB of signal distortion. To ensure that the encoding distortion is less than the psychoacoustically audible threshold, the assigned bit rate is the greatest integer of the MNR divided by 6dB, which is given by:

$$ABIT(j) = \left\lfloor \frac{MNR(j)}{6dB} \right\rfloor$$

By allocating bits in this manner, the noise level **156** in the reconstructed signal will tend to follow the signal itself **157** shown in **FIG. 21**. Thus, at frequencies where the signal is very strong the noise level will be relatively high, but will remain inaudible. At frequencies where the signal is relatively weak, the noise floor will be very small and inaudible. The average error associated with this type of psychoacoustic modeling will always be greater than a mmse noise level **158**, but the audible performance may be better, particularly at low bit rates.

In the event that the sum of the allocated bits for each subband over all audio channels is greater or less than the target bit-rate, the GBM routine will iteratively reduce or increase the bit allocation for individual subbands. Alternately, the target bit rate can be calculated for each audio channel. This is suboptimum but simpler especially in a hardware implementation. For example, the available bits can be distributed uniformly among the audio channels or can be distributed in proportion to the average SMR or RMS of each channel.

In the event that the target bit rate is exceeded by the sum of the local bit allocations, including the VQ code bits and side information, the global bit management routine will progressively reduce the local subband bit allocations. A number of specific techniques are available for reducing the average bit rate. First, the bit rates that were rounded up by the greatest integer function can be rounded down. Next, one bit can be taken away from the subbands having the smallest MNRs. Furthermore, the higher frequency subbands can be turned off or joint frequency coding can be enabled. All bit rate reduction strategies follow the general principle of gradually reducing the coding resolution in a graceful manner, with the perceptually least offensive strategy introduced first and the most offensive strategy used last.

In the event that the target bit rate is greater than the sum of the local bit allocations, including the VQ code bits and side information, the global bit management routine will progressively and iteratively increase the local subband bit allocations to reduce the reconstructed signal's overall noise floor. This may cause subbands to be coded which previously have been allocated zero bits. The bit overhead in 'switching on' subbands in this way may need to reflect the cost in transmitting any predictor coefficients if PMODE is enabled.

The GBM routine can select from one of three different schemes for allocating the remaining bits. One option is to use a mmse approach that reallocates all of the bits such that the resulting noise floor is approximately flat. This is equivalent to disabling the psychoacoustic modeling initially. To achieve a mmse noise floor, the plot **160** of the subbands' RMS values shown in **FIG. 22a** is turned upside down as shown in **FIG. 22b** and "waterfilled" until all of the bits are exhausted. This well known technique is called waterfilling because the distortion level falls uniformly as the number of allocated bits increases. In the example shown, the first bit is assigned to subband 1, the second

and third bits are assigned to subbands 1 and 2, the fourth through seventh bits are assigned to subbands 1, 2, 4 and 7, and so forth. Alternately, one bit can be assigned to each subband to guarantee that each subband will be encoded, and then the remaining bits waterfilled.

A second, and preferred, option is to allocate the remaining bits according to the mmse approach and RMS plot described above. The effect of this method is to uniformly lower the noise floor **157** shown in **FIG. 21** while maintaining the shape associated with the psychoacoustic masking. This provides a good compromise between the psychoacoustic and mse distortion.

The third approach is to allocate the remaining bits using the mmse approach as applied to a plot of the difference between the RMS and MNR values for the subbands. The effect of this approach is to smoothly morph the shape of the noise floor from the optimal psychoacoustic shape **157** to the optimal (flat) mmse shape **158** as the bit rate increases.

In any of these schemes, if the coding error in any subband drops below 0.5 LSB, with respect to the source PCM, then no more bits are allocated to that subband. Optionally fixed maximum values of subband bit allocations may be used to limit the maximum number of bits allocated to particular subbands.

In the encoding system discussed above, we have assumed that the average bit rate per sample is fixed and have generated the bit allocation to maximize the fidelity of the reconstructed audio signal. Alternately, the distortion level, mse or perceptual, can be fixed and the bit rate allowed to vary to satisfy the distortion level. In the mmse approach, the RMS plot is simply waterfilled until the distortion level is satisfied. The required bit rate will vary based upon the RMS levels of the subbands. In the psychoacoustic approach, the bits are allocated to satisfy the individual MNRs. As a result, the bit rate will vary based upon the individual SMRs and prediction gains. This

type of allocation is not presently useful because contemporary decoders operate at a fixed rate. However, alternative delivery systems such as ATM or random access storage media may make variable rate coding practical in the near future.

Quantization of Bit Allocation Indexes (ABIT)

The bit allocation indexes (ABIT) are generated for each subband and each audio channel by an adaptive bit allocation routine in the global bit management process. The purpose of the indexes at the encoder is to indicate the number of levels **162** shown in **FIG. 13** that are necessary to quantize the difference signal to obtain a subjectively optimum reconstruction noise floor in the decoder audio. At the decoder they indicate the number of levels necessary for inverse quantization. Indexes are generated for every analysis buffer and their values can range from 0 to 27. The relationship between index value, the number of quantizer levels and the approximate resulting differential subband SN_QR is shown in **Table 4**. Because the difference signal is normalized, the step-size **164** is set equal to one.

Table 4

Bit allocation index ABIT vs. qu[illegible]r levels, quantizer code length and quanti[illegible]ifferential signal to noise rat

ABIT Index	# of Q Levels	Code Length (bits)	SN_QR(dB)
0	0	0	-
1	3	variable	8
2	5	variable	12
3	7 (or 8)	variable (or 3)	16
4	9	variable	19
5	13	variable	21
6	17 (or 16)	variable (or 4)	24
7	25	variable	27

Table 4 (cont.)

	8	33 (or 32)	variable (or 5)	30
	9	65 (or 64)	variable (or 6)	36
	10	129 (or 128)	variable (or 7)	42
	11	256	8	48
	12	512	9	54
	13	1024	10	60
	14	2048	11	66
	15	4096	12	72
	16	8192	13	78
	17	16384	14	84
	18	32768	15	90
	19	65536	16	96
	20	131072	17	102
	21	262144	18	108
	22	524268	19	114
	23	1048576	20	120
	24	2097152	21	126
	25	4194304	22	132
	26	8388608	23	138
	27	16777216	24	144

The bit allocation indexes (ABIT) are either transmitted to the decoder directly using 4-bit unsigned integer code words, 5-bit unsigned integer code words, or using a 12-level entropy table. Typically, entropy coding would be employed for low-bit rate applications to conserve bits. The method of encoding ABIT is set by the mode control at the encoder and is transmitted to the decoder. The entropy coder maps **166** the ABIT indexes to a particular codebook identified by a BHUFF index and a specific code VABIT in the codebook.

4-bit Coding of ABIT Indexes

In this mode 4-bit unsigned integers are used to represent the ABIT indexes. The index range is therefore 0-15, limiting the number of quantizer levels which can be

allocated in the global bit management to 4096. This mode is used for medium bit-rate applications.

5-bit Coding of ABIT Indexes

In this mode 5-bit unsigned integers are used to represent the ABIT indexes. This code length covers the entire index range. This mode is used for high bit-rate applications.

12-level Entropy Coding

The entropy coding process **166** is as follows; the bit allocation indexes ABIT(j) for the j subbands are mapped to a number (p) of 12-level variable length code books, each optimal for a different input statistical characteristic. The indexes are mapped to each of the 12-level tables and the total bit usage associated with each table (NB_p) is calculated. The table which provides the lowest bit usage over the mapping process is selected using the BHUFF index. The mapped codes, VABIT(j), are extracted from this table, packed and transmitted to the decoder along with the BHUFF index word. The decoder, which holds the same set of 12-leve l inverse tables, uses the BHUFF index to direct the incoming variable length codes, VABIT(j), to the proper table for decoding back to the ABIT indexes.

Since the entropy table uses only 12-levels, the index range is 0-11, limiting the maximum number of quantizer levels which can be allocated in the global bit management to 256. This ABIT coding mode is used for low bit-rate applications.

Entropy Coding for ADPCM Quantizer Level Codes $QL_1(n)$

The method **168** of encoding the differential quantizer level codes depends on the size of the quantizer selected as indicated by the ABIT index. For ABIT indexes ranging from 1 to 10 (3 level to 129 level) the level codes are generally encoded using entropy (variable code length) tables. Under

certain circumstances the 3, 6, 8, 9 and 10 indexes can also indicate fixed length codes and may be transmitted without modification. For ABIT indexes ranging from 11 to 27 (256-level to 16777216-level) the level codes are always fixed length and are transmitted to the decoder without modification.

Entropy Coding for ABIT Indexes 0 - 10

As shown in **FIG. 23**, the differential quantizer level codes are encoded **168** using entropy tables in accordance with the following process. The level codes $QL_j(n)$ generated by the ADPCM encoder **72** in each subband with the same bit allocation are grouped together and mapped to a number (p) of variable length code books whose size is determined by the ABIT index, (**Table 4**). Each codebook is optimized for different input statistical characteristics. The level codes $QL_j(n)$ associated with the same ABIT index value are buffered **170** and mapped **172** to each of the available entropy tables. The total bit usage associated with each table (NB_p) is calculated **174** and the table which provides the lowest bit usage over the mapping process is selected **176** using the **SEL** index. The mapped codes, $VQL_j(n)$, are extracted from this table, packed and transmitted to the decoder along with the SEL index word. The decoder, which holds the same set of inverse tables, uses the ABIT (BHUFF, VABIT) and SEL indexes to direct the incoming variable length codes, $VQL_j(n)$, to the proper table for decoding back to the differential quantizer level codes $QL_j(n)$. An SEL index is generated for each variable length bit allocation index (1-10) used in an audio channel.

Fixed length coding for ABIT Indexes 3, 6, 8, 9, 10

For medium to high bit-rate applications it may be desirable to limit the use of entropy coding to reduce the computational overheads involved in unpacking the variable length codes at the decoder. In this case indexes 3, 6, 8,

9 and 10 may revert to fixed length mid-tread quantizers of 8,16,32,64 and 128 levels respectively and indexes 4, 5 and 7 may be dropped altogether by the bit allocation routine. Indexes 1 and 2 may continue to be used for 3-level and 5-level entropy coding, or they also may be dropped also. In this case however the minimum non-zero bit allocation would be 3 bits. The choice of fixed length quantization is driven by the encoder mode control and is transmitted to the decoder to ensure the proper choice of inverse quantizer.

Global Bit Rate Control

Since both the side information and differential subband samples can optionally be encoded using entropy variable length code books, some mechanism must be employed to adjust the resulting bit rate of the encoder when the compressed bit stream is to be transmitted at a fixed rate. Because it is not normally desirable to modify the side information once calculated, bit rate adjustments are best achieved by iteratively altering the differential subband sample quantization process within the ADPCM encoder until the rate constraint is met.

In the system described, a global rate control (GRC) system **178** in **FIG. 13** adjusts the bit rate, which results from the process of mapping the quantizer level codes to the entropy table, by altering the statistical distribution of the level code values. The entropy tables are all assumed to exhibit a similar trend of higher code lengths for higher level code values. In this case the average bit rate is reduced as the probability of low value code levels increases and vice-versa. In the ADPCM (or APCM) quantization process, the size of the scale factor determines the distribution, or usage, of the level code values. For example, as the scale factor size increases the differential samples will tend to be quantized by the lower levels, and hence the code values will become progressively smaller. This, in turn, will result in smaller entropy code word lengths and a lower bit rate.

The disadvantage of this method is that by increasing the scale factor size the reconstruction noise in the subband samples is also raised by the same degree. In practice, however, the adjustment of the scale factors is normally no greater than 1dB to 3dB. If a greater adjustment is required it would be better to return to the bit allocation and reduce the overall bit allocation rather than risk the possibility of audible quantization noise occurring in subbands which would use the inflated scale factor.

The method of adjusting the entropy encoded ADPCM bit allocation is illustrated in FIG. 24. First, the predictor history samples for each subband are stored in a temporary buffer 180 in case the ADPCM coding cycle 72 is repeated. Next, the subband sample buffers 96 are all encoded by the full ADPCM process 72 using prediction coefficients A_M derived from the subband LPC analysis together with scale factors RMS (or PEAK), quantizer bit allocations ABIT, transient modes TMODE, and prediction modes PMODE derived from the estimated difference signal. The resulting quantizer level codes are buffered 170 and mapped 168 to the entropy variable length code book 172, which exhibits the lowest bit usage again using the bit allocation index to determine the code book sizes.

The GRC system 178 then analyzes 182 the number of bits used for each subband using the same bit allocation index over all indexes. For example, when ABIT=1 the bit allocation calculation in the global bit management could have assumed an average rate of 1.4 per subband sample (i.e. the average rate for the entropy code book assuming optimal level code amplitude distribution). If the total bit usage of all the subbands for which ABIT=1 is greater than 1.4/(total number of subband samples) then the scale factors could be increased throughout all of these subbands to affect a bit rate reduction. Typical nominal word lengths for all the possible entropy ABIT indexes are shown in Table 5. The decision to adjust 184 the subband scale fac-

tors is preferably left until all the ABIT index rates have been accessed. As a result, the indexes with bit rates lower than that assumed in the bit allocation process may compensate for those with bit rates above that level. This assessment may also be extended to cover all audio channels where appropriate.

Table 5
Typical nominal word length of entropy code books vs. ABIT as assumed in bit allocation routine and global rate management.

ABIT Index	Nominal Bits per Sample (Entropy)
1	1.4
2	2.1
3	2.5
4	2.8
5	3.2
6	3.6
7	4.0
8	4.4
9	5.2
10	6.0

The recommended procedure for reducing overall bit rate is to start with the lowest ABIT index bit rate which exceeds the threshold and increase the scale factors in each of the subbands which have this bit allocation. The actual bit usage is reduced by the number of bits that these subbands were originally over the nominal rate for that allocation. If the modified bit usage is still in excess of the maximum allowed, then the subband scale factors for the next highest ABIT index, for which the bit usage exceeds the nominal, are increased. This process is continued until the modified bit usage is below the maximum.

Once this has been achieved, the old history data is loaded into the predictors and the ADPCM encoding process 72

is repeated for those subbands which have had their scale factors modified. Following this, the level codes are again mapped to the most optimal entropy codebooks and the bit usage is recalculated. If any of the bit usage's still exceed the nominal rates then the scale factors are further increased and the cycle is repeated.

The modification to the scale factors can be done in two ways. The first is to transmit to the decoder an adjustment factor for each ABIT index. For example a 2-bit word could signal an adjustment range of say 0, 1, 2 and 3dB. Since the same adjustment factor is used for all subbands which use the ABIT index, and only indexes 1-10 can use entropy encoding, the maximum number of adjustment factors that need to be transmitted for all subbands is 10. Alternately, the scale factor can be changed in each subband by selecting a high quantizer level. However, since the scale factor quantizers have step-sizes of 1.25 and 2.5dB respectively the scale factor adjustment is limited to these steps. Moreover, when using this technique the differential encoding of the scale factors and the resulting bit usage may need to be recalculated if entropy encoding is enabled.

Generally speaking the same procedure can also be used to increase the bit rate, i.e. when the bit rate is lower than the desired bit rate. In this case the scale factors would be decreased to force the differential samples to make greater use of the outer quantizer levels, and hence use longer code words in the entropy table.

If the bit usage for bit allocation indexes cannot be reduced within a reasonable number of iterations, or in the case when the scale factor adjustment factors are transmitted, the number of adjustment steps has reached the limit then two remedies are possible. First, the scale factors of subbands which are within the nominal rate may be increased, thereby lowering the overall bit rate. Alternately, the entire ADPCM encoding process can be aborted and the adaptive bit allocations across the subbands recalculated, this time using fewer bits.

Data Stream Format

The multiplexer **32** shown in **FIG. 12** packs the data for each channel and then multiplexes the packed data for each channel into an output frame to form the data stream **16**. The method of packing and multiplexing the data, i.e. the frame format **186** shown in **FIG. 25**, was designed so that the audio coder can be used over a wide range of applications and can be expanded to higher sampling frequencies, the amount of data in each frame is constrained, playback can be initiated on each sub-subframe independently to reduce latency, and decoding errors are reduced. As shown, a single frame **186** (4096 PCM samples/ch) consists of 4 subframes **188** (1024 PCM samples/ch), which in turn are each made up of 4 sub-subframes **190** (256 PCM samples/ch). Alternately, if the analysis window had a length of only 1024 samples, then a single frame would comprise only a single subframe.

A number of common phrases are abbreviated for the purpose of clarity and conciseness.

Abbreviation	Description
ABIT	Bit Allocation Index Data Array
AHCRC	Audio Headers CRC Check Word
AMODE	Audio Channel Arrangement
AUDIO	Audio Data Array
AUXCNT	Auxiliary Data Byte Count
AUXD	Auxiliary Data Bytes
BHUF	Bit Allocation Index Quantizer Select
CHIST	Copy History
CHS	Number of audio channels
DCOEFF	Dynamic Range Coefficients
DSYNC	Data Synchronization Word
DYNF	Embedded Dynamic Range Flag
FILTS	Multirate Interpolator Switch

	FTYPE	Frame Type Identifier
	FSIZE	Frame Byte Size
	HCRC	Header Reed Solomon Check Word
	HFLAG	Predictor History Flag Switch
5	HFREQ	High Frequency Vector Index Data Array
	JOINX	Intensity Coding Index
	LFE	Low Frequency Effects PCM Data Array
	LFF	Low Frequency Effects Flag
	MCOEFF	Down Mix Coefficients
10	MIX	Embedded Down Mix enabled
	NBLKS	Number of Subframes in Current Frame
	OCRC	Optional Reed Solomon Check Word
	OVER_AUDIO	High frequency sampled Audio Data Array
	PCMR	Source PCM coding Resolution
15	PMODE	Prediction Mode Array
	PSC	Partial sub-subframe Sample Count
	PVQ	Prediction Coefficients VQ index Array
	RATE	Transmission Bit Rate
	SCALES	Subband Scale Factors Data Array
20	SELxx	SEL5 - SEL129
	SEL5	5-level Quantizer Select
	SEL7	7/8-level Quantizer Select
	SEL9	9-level Quantizer Select
	SEL13	13-level Quantizer Select
25	SEL17	17/16-level Quantizer Select
	SEL25	25-level Quantizer Select
	SEL33	33/32-level Quantizer Select
	SEL65	65/64-level Quantizer Select
	SEL129	129/128-level Quantizer Select
30	SFREQ	Source Sampling rate
	SHUFF	Scale Factor Quantizer Select
	SICRC	Side information CRC Check Word
	SSC	Sub-subframe Count
	SUBFS	Number of Subframes
35	SUBS	Subband Activity Count
	SURP	Surplus Sample Count
	SYNC	Frame Synchronization Word

	THUFF	Transient Mode Quantizer Select
	TIMES	Time Code Stamp
	TIME	Embedded Time Stamp Flag
	TMODE	Subband Transient Mode Data Array
5	UNSPEC	Unspecified
	VERNUM	Encoder Software Revision No.
	VQSUB	High Frequency VQ Band Start Number

V Vital Information that is designed to change from frame-to-frame, and hence cannot be averaged over time. Corruption could lead to failure in decoding process leading to noise on outputs.

ACC Corruption of this information could cause decoding failure. However, the settings will ordinarily not change from frame-to-frame. Hence, bit errors can be compensated for by using a majority voter scheme over consecutive frames. If changes are detected, then muting should be activated.

NV Non-vital information in which corruption will gracefully degrade audio decoding performance.

Framing

A frame defines the bit stream boundaries in which sufficient information resides to properly decode a block of audio. Except for termination frames the audio frame will decode either 4096, 2048, 1024, 512 or 256 PCM samples per audio channel. Restrictions (**Table 1**) exist as to the maximum number of PCM samples per frame against the bit stream bit rate. The absolute maximum physical frame size is 65536 bits or 8192 bytes (**Table 2**).

Synchronization

Frame Synchronization Word SYNC 32 bits

Sync word = 0x7ffe8001

(0x7ffe8001 + 0x3f for normal frames)

The frame synchronization word **192** is placed at the beginning of each audio frame. Sync words can occur at the maximum number of PCM samples per frame, or shorter intervals, depending on the application.

Frame Header Information

The frame header information **194** primarily gives information regarding the construction of the frame **186**, the configuration of the encoder which generated the stream and various optional operational features such as embedded dynamic range control and time code.

Frame Type Identifier **V** **FTYPE 1 bit**

1 = Normal frame (4096, 2048, 1024, 512 or 256 PCM sample s/ch)

0 = Termination frame

Termination frames are used when it is necessary to accurately align the end of an audio sequence with a video frame end point. A termination block carries n*32 audio samples where block length 'n' is adjusted to just exceed the video end point. Two termination frames may be transmitted sequentially to avoid transmitting one excessively small frame.

Surplus Sample Count **V** **SURP 5 bits**

Defines the number of samples by which the termination frame exceeds the original file length defined at the encoder. This number applies to all channels. These surplus samples may be simply ignored once decoded or they may be 'cross-faded' with the start samples from the next block to produce a smoother transition. The number of surplus samples equals Modulo_{32}(SURP index plus 1).

The frame byte size is indicated by the FSIZE specifier. Concatenating the sync word with FTYPE and SURP gives an effective word length of 38 bits. For bit synchronization the unreliability factor will be 1 in 1.0E07 attempts.

Number of 32 PCM Sample-Blocks Coded in Current Frame per ch V NBLKS 7 bits

Valid Range = 5 - 127

Invalid Range = 0 - 4

NBLKS+1 indicates the number of 32 sample PCM audio blocks per channel encoded in the current frame per channel. The actual encoder audio window size is 32*(NBLKS+1) PCM samples per channel. For normal frames this will indicate a window size of either 4096, 2048, 1024, 512 or 256 samples per channel. For termination frames NBLKS can take any value in its range.

Frame Byte Size V FSIZE 14 bits

0 - 94 = Invalid

95 - 8191 = Valid range - 1 (ie. 96 bytes to 8192 bytes)

8192 - 16383 = Invalid

FSIZE defines the byte size of the current audio frame. Where the transmission rate and sampling rate are indivisible, the byte size will vary by 1 from block to block to produce a time average.

Audio Channel Arrangement ACC AMODE 6 bits

0b000000 = 1-ch	A	
0b000001 = 2-ch	A + B	(dual mono)
0b000010 = 2-ch	L + R	(stereo)
0b000011 = 2-ch	(L+R) + (L-R)	(sum-difference)
0b000100 = 2-ch	Lt + Rt	(total)
0b000101 = 3-ch	L + R + C	
0b000110 = 3-ch	L + R + S	
0b000111 = 4-ch	L + R + C + S	
0b001000 = 4-ch	L + R + SL + SR	
0b001001 = 5-ch	L + R + C + SL + SR	
0b001010 = 6-ch	L + R + CL + CR + SL + SR	
0b001011 = 6-ch	Lf + Rf + Cf + Cr + Lr + Rr	

0b001100 = 7-ch L + CL + C + CR + R + SL + SR
0b001101 = 8-ch L + CL + CR + R + SL1 + SL2 + SR1 + SR2
0b001110 = 8-ch L + CL + C+ CR + R + SL + S + SR
0b001111 - 0b110000 = User defined codes
0b110001 - 0b111111 = Invalid

The channel arrangement describes the number of audio channels and the audio playback mode. Unspecified modes may be defined at a later date (user defined code) and the control data required to implement them, i.e. channel assignments, down mixing etc, can be input to the decoder locally.

Source Sampling rate ACC SFREQ 4 bits

0b0000 = Invalid
0b0001 = 8kHz
0b0010 = 16kHz
0b0011 = 32kHz
0b0100 = 64kHz
0b0101 = 128kHz
0b0110 = 11.025kHz
0b0111 = 22.05kHz
0b1000 = 44.01kHz
0b1001 = 88.02kHz
0b1010 = 176.4kHz
0b1011 = 12kHz
0b1100 = 24kHz
0b1101 = 48kHz
0b1110 = 96kHz
0b1111 = 192kHz

This specifies the source sampling rate. If the decoder is unable to make use of the over sampled data this may be discarded and the baseband audio converted normally using a standard sampling rate (32,44.1 or 48k). If the decoder is receiving data coded at sampling rates lower

than that available at playback then sample interpolation (2X or 4X) will be required.

Transmission Bit Rate ACC RATE 5 bits

0b00000 = 32kbps
0b00001 = 56kbps
0b00010 = 64kbps
0b00011 = 96kbps
0b00100 = 112kbps
0b00101 = 128kbps
0b00110 = 192kbps
0b00111 = 224kbps
0b01000 = 256kbps
0b01001 = 320kbps
0b01010 = 384kbps
0b01011 = 448kbps
0b01100 = 512kbps
0b01101 = 576kbps
0b01110 = 640kbps
0b01111 = 768kbps
0b10000 = 896kbps
0b10001 = 1024kbps
0b10010 = 1152kbps
0b10011 = 1280kbps
0b10100 = 1344kbps
0b10101 = 1408kbps
0b10110 = 1411.2kbps
0b10111 = 1472kbps
0b11000 = 1536kbps
0b11001 = 1920kbps
0b11010 = 2048kbps
0b11011 = 3072kbps
0b11100 = 3840kbps
0b11101 = 4096kbps
0b11110 = Variable
0b11111 = Lossless

RATE specifies the average transmission rate for the current audio frame. Variable and lossless modes imply that the transmission rate changes from frame to frame.

Embedded Down Mix enabled V MIX 1 bit

0 = mix parameters not present
1 = CHS*2 mix parameters present (8-bits each)

This indicates whether embedded down mixing coefficients are included at the end of the header (see "optional header information").

Embedded Dynamic Range Flag V DYNF 2 bits

0 = dynamic range parameters not present
1 = 1 set of range parameters are present and are valid for the entire block.
2 = 2 sets of range parameters present and are valid for each
1/2 block
3 = 4 sets of range parameters are present and are valid for each 1/4 block

This indicates if embedded dynamic range coefficients are included at the end of the header (see "optional header information")

Embedded Time Stamp Flag V TIME 1 bit

0 = time stamp not present
1 = present

This indicates if an embedded time stamp is included at the end of the header (see "optional header information")

Auxiliary Data Byte Count **V AUXCNT 6 bit**

0 = no bytes present
1- 63 = number of bytes-1

This indicates if embedded auxiliary data bytes are included at the end of the header (see "optional header information")

Low Frequency Effects Flag **V LFF 1 bit**

0 = No effects channel present
1 = Effects channel present

This indicates if low frequency effects audio data is included in the audio subframes

Predictor History Flag Switch **NV HFLAG 1 bit**

0 = Reconstructed history from previous frame is ignored in generating predictions for current frame.
1 = Reconstructed history from previous frame is used as normal.

If frames are to be used as possible entry points into the data stream or as audio sequence "start frames" the predictor history may not be contiguous. Hence these frames can be coded without the previous frame predictor history, ensuring a faster ramp-up on entry.

Header Reed Solomon Check Word **HCRC 8 bits X2**

Multirate Interpolator Switch **NV FILTS 1 bit**

0 = Non perfect reconstructing
1 = Perfect Reconstructing

Indicates which set of 32-band interpolation FIR coefficients are to be used to reconstruct the subband audio.

Encoder Software Revision No. ACC VERNUM 4 bits

0 - 6 = Future revision which will be compatible with this specification
7 = Current
8 - 15 = Future revision which is incompatible with this specification

Copy History NV CHIST 2 bits

0x00 = Copy Prohibited
0x01 = First Generation
0x10 = Second Generation
0x11 = Original Material

Indicates the generation history of the audio material within the bit stream.

Source PCM coding Resolution NV PCMR 3 bits

0x000 = 16 bits
0x001 = 18 bits
0x010 = 20 bits
0x011 = 21 bits
0x100 = 22 bits
0x101 = 23 bits
0x110 = 24 bits
0x111 = INVALID

Indicates the PCM resolution of the encoded source digital audio samples.

Unspecified **NV UNSPEC 6 bits**

This header is presently unspecified.

Optional Header Information

The optional header information **196** tells the decoder if downmixing is required, if dynamic range compensation was done and if auxiliary data bytes are included in the data stream.

Time Code Stamp **ACC TIMES 32 bits**

Down Mix Coefficients **V MCOEFF 8bit*CHS*2**

Dynamic Range Coefficients **V DCOEFF 8 bit *CHS*no. of sets**

Auxiliary Data Bytes **NV AUXD 8bit*AUXCT**

Optional Reed Solomon Check Word **OCRC 8 bits X 2**

Optional check bytes will be inserted only if mix, or dynamic range coefficients are present.

Audio Coding Header

The audio coding headers **198** indicate the packing arrangement and coding formats used at the encoder to assemble the coding 'side information', i.e. bit allocations, scale factors, PMODES, TMODES, codebooks, etc. Many of the headers are repeated for each audio channel.

Number of Subframes **SUBFS 4 bits**

One SUBFS index is transmitted per audio frame. The index indicates the number of discreet data blocks or audio subframes contained within the main audio frame. Each subframe may be decoded independent from any other subframe. SUBS is valid for all audio channels (CHS). The number of

subframes equals the SSUBFS index plus 1.

Number of audio channels CHS 3 bits

A single CHS index is transmitted to indicate the number of separate audio channels for which data may be found in the current audio frame. The number of audio channels equals the CHS index plus 1.

Subband Activity Count SUBS 5 bits X CHS

A SUBS index is transmitted for each audio channel. The index indicates the number of active subbands in each audio channel, SUBS index plus 2. Samples in subbands located above SUBS are reset prior to computing the 32-band interpolation filter, provided that intensity coding in that band is disabled. SUBS are not transmitted if SFREQ is greater than 48kHz.

High Frequency VQ Band Start Number VQSUB 4 bits X CHS

A VQSUB index is transmitted for each audio channel. The irdex indicates the starting subband number, VQSUB index + 18, for which high frequency vector quantizer code book addresses are present in the data packets. VQSUBS are not transmitted if SFREQ is greater than 48kHz. VQSUBS should be ignored for any audio channel using intensity coding.

Intensity Coding Index JOINX 3 bit X CHS

An intensity coding index is transmitted for each audio channel. The index in **Table 6** indicates whether joint intensity coding is enabled and which audio channels carry the joint audio data. If enabled, the SUBS index changes to indicate the first subband from which intensity coding begins, SUBS index plus 2. Intensity coding will not be enabled if SFREQ is greater than 48kHz.

Table 6

Joint Frequency Coding

JOINX index	Joint Coding	Channel Source
0	off	n/a
1	on	Ch no.+1
2	on	Ch no.+2
3	on	Ch no.+3
4	on	Ch no.+4
5	on	Ch no.+5
6	on	Ch no.+6
7	on	Ch no.+7

Transient Mode Quantizer Select THUFF 2 bits X CHS

A THUFF index is transmitted for each audio channel. The index selects either 4-level Huffman or fixed 4-level (2-bit) inverse quantizers for decoding the transient mode data.

Scale Factor Quantizer Select SHUFF 3 bits X CHS

A SHUFF index is transmitted for each audio channel. The index selects either 129-level Huffman, fixed 64-level (6-bit), or fixed 128-level (7-bit) inverse quantizers for decoding the scale factor data.

Bit Allocation Index Quantizer Select BHUFF 3 bits X CHS

A BHUFF index is transmitted for each audio channel. The index selects either 13-level Huffman, fixed 16-level (4-bit), or fixed 32-level (5-bit) inverse quantizers for decoding the bit allocation indexes.

5-level Quantizer Select SEL5 1 bit X CHS

A SEL5 index is transmitted for each audio channel. The index indicates which 5-level inverse Huffman quantizer will be used to decode audio codes which have a bit

allocation index of 2.

7/8-level Quantizer Select SEL7 2 bits X CHS

A SEL7 index is transmitted for each audio channel. The index indicates which 7-level inverse Huffman quantizer will be used to decode audio codes which have a bit allocation index of 3. When SEL7=3 an 8-level (3-bit) fixed rate quantizer is used.

9-level Quantizer Select SEL9 2 bits X CHS

A SEL9 index is transmitted for each audio channel. The index indicates which 9-level inverse Huffman quantizer will be used to decode audio codes which have a bit allocation index of 4.

13-level Quantizer Select SEL13 2 bits X CHS

A SEL13 index is transmitted for each audio channel. The index indicaces which 13-level inverse Huffman quantizer will be used to decode audio codes which have a bit allocation index of 5.

17/16-level Quantizer Select SEL17 3 bits X CHS

A SEL17 index is transmitted for each audio channel. The index indicates which 17-level inverse Huffman quantizer will be used to decode audio codes which have a bit allocation index of 6. When SEL17=7 a 16-level (4-bit) fixed rate quantizer is used.

25-level Quantizer Select SEL25 3 bits X CHS

A SEL25 index is transmitted for each audio channel. The index indicates which 25-level inverse Huffman quantizer will be used to decode audio codes which have a bit allocation index of 7.

33/32-level Quantizer Select SEL33 3 bits X CHS

A SEL33 index is transmitted for each audio channel. The index indicates which 33-level inverse Huffman quantizer

will be used to decode audio codes which have a bit allocation index of 8. When SEL33=7 a 32-level (5-bit) fixed rate quantizer is used.

65/64-level Quantizer Select SEL65 3 bits X CHS

A SEL65 index is transmitted for each audio channel. The index indicates which 65-level inverse Huffman quantizer will be used to decode audio codes which have a bit allocation index of 9. When SEL65=7 a 64-level (6-bit) fixed rate quantizer is used.

129/128-level Quantizer Select SEL129 3 bits X CHS

A SEL129 index is transmitted for each audio channel. The index indicates which 129-level inverse Huffman quantizer will be used to decode audio codes which have a bit allocation index of 10. When SEL129=7 a 128-level (7-bit) fixed rate quantizer is used.

Audio Headers CRC Check Word AHCRC 8 bits X 2

Optional Reed Solomon check bytes to verify audio header validity.

Audio Subframes

The remainder of the frame is made up of SUBFS consecutive audio subframes **188**. Each subframe begins with the audio coding side information, followed by the audio data itself. Each subframe is terminated with unpacking verification/synchronization bytes. Audio subframes are decoded entirely without reference to any other subframe.

Audio Coding Side Information

The audio coding side information **200** relays information regarding a number of key encoding systems used to compress the audio to the decoder. These include transient detection, predictive coding, adaptive bit allocation, high frequency vector quantization, intensity coding and adaptive scaling. Much of this data is unpacked

from the data stream using the audio coding header information above.

Sub-subframe Count SSC 2 bits

Indicates the number of 256 sample blocks (sub-subframes) represented in the current audio subframe per channel, SSC index plus 1. The maximum sub-subframe count is 4 and the minimum 1. For a 32 band filter this gives either 1024, 512, 256 or 128 samples per subframe per audio channel. The SSC is valid for all audio channels.

Partial sub-subframe Sample Count PSC 3 bits

Indicates the number of subband samples in a partial sub-subframe (ie the SSCth+1). Normally PSC will be 0, i.e. a partial sub-subframe does not exist. Partial sub-subframes frames will only exist in termination frames, (PSC is always 0 when SSC=4, ie subframe size cannot exceed 1024 samples). The PSC is valid for all audio channels.

Prediction Mode Array PMODE

Ordered as 1 bit per subband per channel, starting at subband 1 of channel 1 through to subband SUBS of channel 1 and repeating for CHS channels. When PMODE=1 then prediction mode is active, and prediction mode is inactive when PMODE=0. The SUBS indicates the last subband for the PMODES, in both non-intensity and intensity coding modes.

Prediction Coefficients VQ index Array PVQ

A 12-bit prediction coefficient vector index will exist for each subband for which PMODE is active starting from subband 1 in channel 1 through to subband SUBS, and repeating for remaining channels. The predictor coefficients themselves are obtained by applying the index to the vector code book, which has 8192 different vectors. The predictor coefficients are valid for the current subframe. If PMODE = 0 the predictor coefficients are held in reset.

Bit Allocation Index Data Array **ABIT**

This array is decoded using a Huffman/linear inverse quantizer as indicated by indexes BHUFF. Bit allocation indexes are not transmitted for subbands which are encoded using the high frequency vector quantizer or for subbands which are intensity coded. The index ordering begins with subband 1, channel 1, through to the last active subband of CHS channel.

Subband Transient Mode Data Array **TMODE**

This array does not exist if only one sub-subframe resides in the subframe (SSC). TMODES are decoded using a Huffman/linear inverse quantizer as indicated by indexes THUFF. TMODE data is not transmitted for subbands which are encoded using the high frequency vector quantizer. The array is ordered audio channel 1 to channel CHS. The transient modes are valid for the current sub-frame.

Subband Scale Factor Data Array **SCALES**

This array is decoded using a Huffman/linear inverse quantizer as indicated by indexes SHUFF. If Huffman inverse quantization is indicated the scale data is differentially encoded and must be converted to absolute by adding the current value to previous sum. Scale factors are then converted to rms values using the 6-bit or 7-bit look up tables. In any subband a single scale factor is transmitted when the corresponding tmode=0. Otherwise two scale factors are transmitted.

Side information CRC Check Word **SICRC 8 bits X 2**

The validity of the subframe side information beginning from SSC can be optionally verified using the Reed Solomon check bytes SICRC.

Audio Data Arrays

High Frequency Vector Index Data Array **HFREQ**

This array **202** consists of 10-bit indexes per high frequency subband indicated by VQSUB indexes. 32 audio samples are obtained by mapping each 10-bit index to the high frequency code book, which has 1024 length 32 quantization vectors.

Low Frequency Effects PCM Data Array **LFE**

This array **204** is not present if LFF=0. It comprises a number of 8-bit effect samples plus one 7-bit scale factor. The number of effective bytes present in LFE is given by SSC*2 when PSC=0 or (SSC+1)*2 when PSC is non zero. This array represents the very low frequency data that can be used to drive, for example, a subwoofer.

Audio Data Array **AUDIO**

The audio array **206** is decoded using Huffman/fixed inverse quantizers as indicted by indexes ABITS (**Table 8**) and in conjunction with SEL indexes when ABITS are less than 11. This array is divided into a number of sub-subframes (SSC), each decoding up to 256 PCM samples per audio channel.

High Frequency Sampled Audio **OVER_AUDIO**

This array **208** is only present if SFREQ is greater than 48kHz. The first 2 bytes of the array indicate the total number of bytes present in the data array. The decoding specification for the high frequency sampled audio will be defined in future revisions. To remain compatible, decoders which cannot operate at sampling rates above 48kHz should skip this audio data array.

Data Synchronization Word **DSYNC** **16 bits**

DSYNC=0xffff

DSYNC **210** is used to verify the end of the subframe position in audio frame. If the position does not verify, the audio decoded in the subframe is declared unreliable. As a result, either that frame is muted or the previous frame is repeated.

Subband Decoder

FIG.s 26 and **27** are a flowchart and a block diagram of the subband sample decoder **18**, respectively. The decoder is quite simple compared to the encoder and does not involve calculations that are of fundamental importance to the quality of the reconstructed audio such as bit allocations. After synchronization the unpacker **40** unpacks the compressed audio data stream **16**, detects and if necessary corrects transmission induced errors, and demultiplexes the data into individual audio channels. The subband differential signals are requantized into PCM signals and each audio channel is inverse filtered to convert the signal back into the time domain.

Receive Audio Frame and unpack Headers

The coded data stream is packed (or framed) at the encoder and includes in each frame additional data for decoder synchronization, error detection and correction, audio coding status flags and coding side information, apart from the actual audio codes themselves.

In the first step **212**, the unpacker **40** detects the SYNC word and extracts the frame size FSIZE:

Find Sync **[sync]**

The coded bit stream consists of consecutive audio frames, each beginning with a 32-bit (0x7ffe8001) synchronization word (SYNC). Since the frame type will almost always be normal (FTYPE=1 and SURP=0x1f) the sync word may be reliably concatenated with 0x3f increasing the

effective sync word size to 38 bits. To compensate for bit errors the position of SYNC may be averaged with previous frames or it may be verified using the Reed Solomon check word HCRC.

Determine size of Data Frame and Audio Window [fsize] [Nblks]

Once SYNC has been detected the physical size of the audio frame, FSIZE is extracted from the bytes following the sync word. This allows the programmer to set an 'end of frame' timer to reduce software overheads. As a result, the decoder can read in a complete frame without having to unpack the frame on-line. The actual frame size may vary from frame to frame, for example in the case when Fsamp=44.1. However, to enable practical buffer management, certain limitations exist as to the maximum number of bytes that is to be expected in any given audio frame for fixed rate coding as shown in **Tables 1,2**. For example, for audio encoded at 48kHz sampling, with a bit rate of 384kbps, the largest audio window at the encoder is 4096 samples, giving a maximum transmitted frame size of approximately 5.3k bytes, irrespective of the number of audio channels being coded. The 'worst case' frame size is always 8k bytes for 8,16,32,64,128kHz sampling rate modes. This limit does not apply for the variable or lossless coding modes since due to the burst nature of the input data, on-chip buffering would prove impractical in any case.

Next NBlks is extracted which allows the decoder to compute the Audio Window Size (32(Nblks+1)). This tells the decoder what side information to extract and how many reconstructed samples to generate.

The next steps are to optionally Read Solomon (CRC) check **214** the header bytes, unpack the frame headers **216**, unpack the optional embedded data **218**, and optionally CRC check **220** the optional header bytes:

Verify Validity of Audio frame Headers

[sync,ftype,surp,nblks,fsize,amode,sfreq,rate,mixt,dynf,dynct,time,auxcnt,lff,hflag]

As soon as the frame header bytes have been received (or the entire audio frame) the validity of the first 12 bytes may checked using the Reed Solomon check bytes, HCRC. These will correct 1 erroneous byte out of the 14 bytes or flag 2 erroneous bytes. After error checking is complete the header information is used to update the decoder flags.

Extract Non-critical frame Headers

[filts,vernum,chist,pcmr,unspec]

The headers following HCRC and up to the optional information, may be extracted and used to update the decoder flags. Since this information will not change from frame to frame, a majority vote scheme may be used to compensate for bit errors.

Extract optional headers

[times,mcoeff,dcoeff,auxd,ocrc]

The optional header data is extracted according to the mixct, dynf, time and auxcnt headers. The optional data may be verified using the optional Reed Solomon check bytes OCRC.

The final steps **222** and **224** involved in unpacking the headers are to:

Extract and verify audio coding frame headers

[subfs, subs,chs,vqsub,joinx,thuff,shuff,bhuff, sel5,sel7,sel9,sel13,sel17,sel25,sel33,sel65,sel129,ahcrc]

The audio coding frame headers are transmitted once in every frame. They may be verified using the audio Reed Solomon check bytes AHCRC. Most headers are repeated for each audio channel as defined by CHS.

Unpack Subframe Coding Side Information

The audio coding frame is divided into a number of subframes (SUBFS). The number of PCM samples represented in each subframe is given by ((SSC+1)*256)+(PSC*32). All the necessary side information (pmode, pvq, tmode, scales, abits, hfreq) is included to properly decode each subframe of audio without reference to any other subframe.

Each successive subframe is decoded by first unpacking its side information **226**:

Unpack Prediction Modes [pmodes]

A 1-bit prediction mode (PMODE) flag is transmitted for every active subband (SUBS) and across all audio channel (CHS). The PMODE flags are valid for the current subframe. PMODE=0 implies that the predictor coefficients are not included in the audio frame for that subband. In this case the predictor coefficients in this band are reset to zero for the duration of the subframe. PMODE=1 implies that the side information contains predictor coefficients for this subband. In this case the predictor coefficients are extracted and installed in its predictor for the duration of the subframe. The pmodes are packed, starting with audio channel 1, in ascending subband number up to SUBS specifier, followed by those from channel 2 etc.

Unpack Prediction VQ index array [pvq]

The predictors used in audio coder are all-pole 4th order linear. The predictor coefficients are encoded using a 12-bit 4-element vector quantizer. To reconstruct the coefficients at the decoder an identical 4096 X 4 vector look-up table is stored at the decoder. The coefficients address information is hence transmitted to the decoder as indexes (PVQ). The predictor coefficients are valid for the entire subframe.

For every PMODE=1 in the pmode array a corresponding prediction coefficient VQ address index is located in array PVQ. The indexes are fixed unsigned 12-bit integer words

and the 4 prediction coefficients are extracted from the look-up table by mapping the 12-bit integer to the vector table. The ordering of the 12-bit indexes matches that of the pmodes. The coefficients in LUT are stored as 16-bit signed fractional (Q13) binary.

Unpack Bit allocation index array [abit]

The bit allocation indexes (ABIT) indicate the number of levels in the inverse quantizer which will convert the subband audio codes back to absolute values. ABITs are transmitted for each subband subframe, starting at the first and stopping at the SUBS or VQSUB subband limit, which ever is smaller. The unpacking format differs for the ABITs in each audio channel, depending on the BHUFF index and a specific VABIT code. The ABITs are packed, starting with audio channel 1, in ascending subband number up to the SUBS/VQSUB limit, followed by those from channel 2, and so on. For intensity coded audio channels ABIT indexes are transmitted only for subbands up to the SUBS limit.

BHUFF=6

In this mode the ABIT indexes are packed as fixed 5-bit unsigned integers, giving a range of indexes between 0-31.

BHUFF=5

In this mode the ABIT indexes are packed as fixed 4-bit unsigned integers, giving a range of indexes between 0-15.

BHUFF= 4 - 0

In this mode the ABIT indexes are unpacked using a choice of five 13-level unsigned Huffman inverse quantizers giving a range of indexes between 0-12.

Unpack Subband Transient Mode array [tmode]

The transient mode side information (TMODE) is used to indicate the position of transients in each subband with respect to the subframe. Each subframe is divided into 1 to

4 sub-subframes. In terms of subband samples each sub-subfr ame consists of 8 samples. The maximum subframe size is 32 subband samples. If a transient occurs in the first sub-subf rame then tmode=0. A transient in the second sub-subframe is indicated when tmode=1, and so on. To control transient distortion, such as pre-echo, two scale factors are transmitted for subframe subbands where TMODE is greater then 0. The first scale factor is used to scale the subband audio in the sub-subframes up to the one which contains the transient. The second scale factor is used to scale the subband audio in the sub-subframe which contains the transient and in any following sub-subframes.

However, if only one sub-subframe exists in the current subframe (SSC=0) then no TMODEs are transmitted for any of the audio channels. This is because the position of transients in a single sub-subframe need not be resolved and TMODEs can be assumed to be zero. Hence, when SSC=0, a single scale factor will exist per subband up to the normal SUBS limit.

For non-intensity coded channels, TMODE indexes are not transmitted for subbands which use high frequency vector quantization (VQSUB), subbands in which the subframe bit allocation index is zero, or for subbands beyond the SUBS limit. In the case of VQSUB subbands, the TMODE indexes default to zero.

For intensity coded channels where SUBS is used to indicate the first joined subband, even though bit allocation indexes do not exist above SUBS, TMODES are still transmitted for subbands above the SUBS limit. The actual number of subbands for which TMODES are transmitted in intensity coded channels is the same as that in the source audio channel, i.e. use the SUBS for the audio channel indicated by the JOINX.

The THUFF indexes extracted from the audio headers determine the method required to decode the TMODEs. When THUFF=3, the TMODEs are unpacked as un-signed 2-bit integers. When THUFF is any other value then they are

decoded using a choice of three 4-level Huffman inverse quantizers. specifically the THUFF index selects a particular table and the VTMODE index selects a code from that table.

The TMODES are packed, starting with audio channel 1, in ascending subband number, followed by those from channel 2, and so on.

Unpack subband scale factor array [scales]

Scale factor indexes are transmitted to allow for the proper scaling of the subband audio codes within each subframe. If TMODE is equal to zero (or defaults to zero, as is the case with VQSUBS subbands) then one scale factor is transmitted. If TMODE is greater than zero for any subband, then two scale factors are transmitted together.

For non-intensity coded channels, scale factors are always transmitted except for subbands beyond the SUBS limit, or for subbands in which the subframe bit allocation index is zero. For intensity coded channels, scale factors are transmitted up to the SUBS limit of the source channel given in JOINX.

The SHUFF indexes extracted from the audio headers determine the method required to decode the SCALES for each separate audio channel. The $VDRMS_{QL}$ indexes determine the value of the RMS scale factor. The scale indexes are packed, starting with audio channel 1, in ascending subband number, followed by those from channel 2, and so on.

SHUFF=6

SCALES indexes are unpacked for this channel as un-signed 7-bit integers. The indexes are converted to rms values by mapping to the nearest 7-bit quantizer level. At 127 levels, the resolution of the scale factors is 1.25dB and the dynamic range 158dB. The rms values are unsigned 20-bit fractional binary, scaled with 4 different Q factors depending on the magnitude.

SHUFF=5

SCALES indexes are unpacked for this channel as un-signed 6-bit integers. The indexes are converted to rms values by mapping to the nearest 6-bit quantizer level. At 63 levels, the resolution of the scale factors is 2.25dB and the dynamic range 141dB. The rms values are unsigned 20-bit fractional binary, scaled with 4 different Q factors depending on the magnitude.

SHUFF= 4 - 0

SCALES indexes are unpacked for this channel using a choice of five 129-level signed Huffman inverse quantizers. The resulting inverse quantized indexes are, however, differentially encoded and are converted to absolute as follows;

ABS_SCALE(n+1)=SCALES(n)-SCALES(n+1) where n is the nth differential scale factor in the audio channel starting from the first subband.

Note, the first differential scale factor (n=1) for each channel is copied directly into the absolute array, and subbands for which there is no scale index are dropped from the calculation . The absolute indexes are then converted to rms values by mapping to the nearest 6-bit quantizer level. At 63 levels, the resolution of the scales factors is 2.25dB and the dynamic range 141dB. The rms values are unsigned 20-bit fractional binary, scaled with 4 different Q factors depending on the magnitude.

The remaining steps include an optional CRC check **228**, unpacking high frequency VQ codes **230**, and unpacking the LFE codes **232**:

Verify Subframe side information with SICRC Check bytes

The validity of the subframe side information data beginning from SSC can be optionally verified using the extracted Reed Solomon check bytes SICRC **228**. This check is

only practical when the side information is linearly encoded ie Huffman quantizers are not used. This is normally the case for high bit-rate coding modes.

Unpack high frequency VQ index array [hfreq]

At low bit-rate audio coding modes, the audio coder uses vector quantization to efficiently encode high frequency subband audio samples directly. No differential encoding is used in these subbands and all arrays relating to the normal ADPCM processes must be held in reset. The first subband which is encoded using VQ is indicated by VQSUB and all subbands up to SUBS are also encoded in this way. The VQSUB index is meaningless when the audio channel is using intensity coding (JOINX).

The encoder uses a 10-bit 32-element vector look-up table. Hence, to represent 32 subband samples a 10-bit address index is transmitted to the decoder. Using an identical look-up table at the decoder, the same 32 samples are extracted **230** by mapping the index to the table. Only one index is transmitted for each subband per subframe. If a termination frame (FTYPE) is flagged and the current subframe is less than 32 subband samples (PSC) then the surplus samples included in the vector should be ignored.

The high frequency indexes (HFREQ) are unpacked as fixed 10-bit unsigned integers. The 32 samples required for each subband subframe are extracted from the Q4 fractional binary LUT by applying the appropriate indexes. This is repeated for each channel in which the high frequency VQ mode is active.

The high frequency indexes are packed starting with the lowest audio channel for which VQSUBS is active and in ascending subbands, followed by those from the next active channel, and so on.

Unpack Low frequency Effects PCM array [lfe]

The decimation factor for the effects channel is always X128. The number of 8-bit effect samples present in LFE is

given by SSC*2 when PSC=0 or (SSC+1)*2 when PSC is non zero. An additional 7-bit scale factor (unsigned integer) is also included at the end of the LFE array and this is converted to rms using a 7-bit LUT.

Unpack Sub-subframe Audio codes array

Unpack Baseband Audio Codes **[audio]**

The extraction process **234** for the subband audio codes is driven by the ABIT indexes and, in the case when ABIT<11, the SEL indexes also. The audio codes are formatted either using variable length Huffman codes or fixed linear codes. Generally ABIT indexes of 10 or less will imply a Huffman variable length codes, which are selected by codes VQL(n), while ABIT above 10 always signify fixed codes (**Table 7**). All quantizers have a mid-tread, uniform characteristic. For the fixed code (Y^2) quantizers the most negative level is dropped.

Table 7

Audio Inverse Quantizer Table vs. ABIT and SEL[xx] indexes

		Choice of quantizer tables (SELxx indexes)							
ABIT index	Number of Q levels	0	1	2	3	4	5	6	7
0	0								
1	3	A3							
2	5	A5	B5						
3	7(8)	A7	B7	C7	Y8				
4	9	A9	B9	C9	D9				
5	13	A13	B13	C13	D13				
6	17(16)	A17	B17	C17	D17	E17	F17	G17	Y16
7	25	A25	B25	C25	D25	E25	F25	G25	H25
8	33(32)	A33	B33	C33	D33	E33	F33	G33	Y32
9	65(64)	A65	B65	C65	D65	E65	F65	G65	Y64
10	129(128)	A129	B129	C129	D129	E129	F129	G129	Y128
11	256	Y256							

Table 7 (cont.)

12	512	Y512
13	1024	Y1024
14	2048	Y2048
15	4096	Y4096
16	8192	Y8192
17	16384	Y16384
18	32768	Y32768
19	65536	Y65536
20	131072	Y131072
21	262144	Y262144
22	524288	Y524288
23	1048576	Y1048576
24	2097152	Y2097152
25	4194304	Y4194304
26	8388608	Y8388608
27	16777216	Y16777216
28-31	invalid	invalid

where Y = uniform mid-tread fixed-code quantizer and A,B, C,D,E,F,G = uniform mid-tread variable-code (Huffman) quantizer.

The audio codes are packed into sub-subframes, each representing a maximum of 8 subband samples, and these sub-subframes are repeated up to four times in the current subframe. Hence the above unpacking procedure must be repeated SSC times in each subframe. The reason for packing the audio in this way is to allow a single sub-subframe to be unpacked and decoded without having to unpack the entire subframe. This reduces the computational overhead when using a sub-subframe size output buffer (256 samples per channel).

In the case of termination frame where PSC is non zero, the unpacking is repeated a further time, except that the number of codes for each subband is now equal to PSC. In this case also, the ABIT indexes are reused from the previous sub-subframe.

Unpack High Frequency Audio codes [over_audio]

If the sampling rate flag (SFREQ) indicates a rate higher than 48kHz then the over_audio data array will exist in the audio frame. The first two bytes in this array will indicate the byte size of over_audio. The higher frequency sampled audio decoding specification is currently being finalized and will be the subject of future drafts. Presently this array should be ignored and the base-band audio decoded as normal. Further, the sampling rate of the decoder hardware should be set to operate at SFREQ/2 or SFREQ/4 depending on the high frequency sampling rate.

Unpack Synchronization Check **[dsync]**

A data unpacking synchronization check word DSYNC=0xffff is detected **236** at the end of every subframe to allow the unpacking integrity to be verified. The use of variable code words in the side information and audio codes, as is the case for low audio bit rates, can lead to unpacking mis-alignment if either the headers, side information or audio arrays have been corrupted with bit errors. If the unpacking pointer does not point to the start of DSYNC then it can be assumed the previous subframe audio is unreliable. If the headers and side information are known to be error free, the unpacking of the next subframe should begin from the first bit following DSYNC.

Once all of the side information and audio data is unpacked, the decoder reconstructs the multi-channel audio signal a subframe at a time. **FIG. 27** illustrates the baseband decoder portion for a single subband in a single channel.

Reconstruct RMS Scale Factors

In **step 237**, the decoder reconstructs the RMS scale factors (SCALES) for the ADPCM, VQ and JFC algorithms. In particular, the VTMODE and THUFF indexes are inverse mapped (**step 238**) to identify the transient mode (TMODE) for the

current subframe. Thereafter, the SHUFF index, $VDRMS_{QL}$ codes and TMODE are inverse mapped (**step 240**) to reconstruct the differential RMS code. The differential RMS code is inverse differential coded (**step 242**) to select the RMS code, which is them inverse quantized (**step 244**) to produce the RMS scale factor.

Inverse Quantize High Frequency Vectors

In **step 246** the decoder inverse quantizes the high frequency vectors to reconstruct the subband audio signals. In particular, the extracted high frequency samples (HFREQ), which are signed 8-bit fractional (Q4) binary number, as identified by the start VQ subband (VQSUBS) are mapped (**step 248**) to an inverse VQ lut. The selected table value is inverse quantized (**step 250**), and scaled by the RMS scale factor (**step 252**).

Inverse Quantize Audio Codes

Before entering the ADPCM loop the audio codes are inverse quantized **254** and scaled to produce reconstructed subband difference samples. The inverse quantization is achieved by first inverse mapping (**step 256**) the VABIT and BHUFF index to specify the ABIT index which determines the step-size and the number of quantization levels and inverse mapping (**step 258**) the SEL index and the VQL(n) audio codes which produces the quantizer level codes QL(n). Thereafter, the code words QL(n) are mapped to the inverse quantizer look-up table specified by ABIT and SEL indexes (**step 260**). Although the codes are ordered by ABIT, each separate audio channel will have a separate SEL specifier. The look-up process results in a signed quantizer level number which can be converted to unit rms by multiplying with the quantizer step-size. The unit rms values are then converted to the full difference samples by multiplying with the designated RMS scale factor (SCALES) (**step 262**).

1. QL[n] = 1/Q[code[n]] where 1/Q is the inverse

quantizer look-up table

2. Y[n] = QL[n] * StepSize[abits]

3. Rd[n] = Y[n] * scale_factor where Rd=reconstructed difference samples

Inverse ADPCM

The ADPCM decoding process **264** is executed for each subband difference sample as follows;

1. Load the prediction coefficients from the inverse VQ lut (**step 266**).

2. Generate the prediction sample by convolving the current predictor coefficients with the previous 4 reconstructed subband samples held in the predictors history array (**step 268**).

P[n] = sum (Coeff[i]*R[n-i]) for i=1, 4 where n=current sample period

3. Add the prediction sample to the reconstructed difference sample to produce a reconstructed subband sample (**step 270**).

R[n]=Rd[n]+P[n]

4. Update the history of the predictor, ie copy the current reconstructed subband sample to the top of the history list.

R[n-i]=R[n-i+1] for I =4, 1

In the case when PMODE=0 the predictor coefficients will be zero, the prediction sample zero, and the reconstructed subband sample equates to the differential subband sample. Although in this case the calculation of

the prediction is unnecessary, it is essential that the predictor history is kept updated in case PMODE should become active in future subframes. Further, if the HFLAG is active in the current audio frame, the predictor history should be cleared prior to decoding the very first sub-subfr ame in the frame. The history should be updated as usual from that point on.

In the case of high frequency VQ subbands or where subbands are deselected (i.e. above SUBS limit) the predictor history should remain cleared until such time that the subband predictor becomes active.

Joint Frequency (Intensity) Coding in subbands

The presence of intensity coding in any audio channel is flagged **272** when JOINX is non zero. JOINX indicates the channel number where the amalgamated or joined subband audio is located (**Table 6**). The reconstructed subband samples in the source channel are copied over to the corresponding subbands in the intensity channels, beginning at the subband indicated by the SUBS of the intensity channel itself. During the process of transferring the source subband audio to the intensity subbands, the amplitude of the samples are multiplied by the ratio of the source subband rms and the intensity subband rms (**step 274**). The source subband rms must be explicitly calculated in subframes where PMODE=1 since the scale factors for these bands represent the differential signal energy, not the absolute. However, for all intensity subbands the scale factor (SCALES) will represent the absolute rms and so they can be used directly. The ratio is calculated once for the entire subframe, or for the sub-subframe combinations when TMODE is non zero.

Selection Control of ADPCM, VQ and JFC Decoding

A first "switch" controls the selection of either the ADPCM or VQ output (**step 276**). The VQSUBS index identifies the start subband for VQ encoding. Therefore if the current subband is lower than VQSUBS, the switch selects the ADPCM

output. Otherwise it selects the VQ output. A second "switch" controls the selection of either the direct channel output or the JFC coding output. The JOINX index identifies which channels are joined and in which channel the reconstructed signal is generated. The reconstructed JFC signal forms the intensity source for the JFC inputs in the other channels. Therefore, if the current subband is part of a JFC and is not the designated channel than, the switch selects the JFC output (step 278). Normally, the switch selects the channel output.

Down Matrixing

The audio coding mode for the data stream is indicated by AMODE. Using **Table 8** the audio channel assignment is obtained for chs 1 to 8. The decoded audio channels can then be redirected to match the physical output channel arrangement on the decoder hardware.

Table 8

Audio Modes (AMODE) vs. Channel Assignment

			Physical Channel							
	AMODE	CHS	1	2	3	4	5	6	7	8
	0	1-ch	A							
	1	2-ch	A	B						
	2	2-ch	L	R						
	3	2-ch	(L+R)	(L-R)						
	4	2-ch	Lt	Rt						
	5	3-ch	L	R	C					
	6	3-ch	L	R	S					
	7	4-ch	L	R	C	S				
	8	4-ch	L	R	SL	SR				
	9	5-ch	L	R	C	SL	SR			
	10	6-ch	L	R	CL	CR	SL	SR		
	11	6-ch	Lf	Rf	Cf	Cr	Lr	Rr		
	12	7-ch	L	CL	C	CR	R	SL	SR	
	13	8-ch	L	CL	CR	R	SL1	SL2	SR1	SR2
	14	8-ch	L	CL	C	CR	R	SL	S	SR

In the case when the physical playback arrangement has fewer channels then there are decoded channels, the decoded audio must be down matrixed **280** to match the playback system. A fixed down matrix table for 8-ch decoded audio is given in **Table 9**. Due to the linear nature of the down matrixing, this process can operate directly on the subband samples in each channel and retain the alias cancellation properties of the filterbank (with the appropriate scaling). This avoids having to run the interpolation filterbanks for redundant channels.

Table 9

Down-mix coefficients for 8-channel source audio (5+3 format)

5			lt	lt center	ctr	rt center	rt	lt srd	ctr srd	rt srd
	1		0.71	0.71	1.0	0.71	0.71	0.58	0.58	0.58
	2	left	1.0	0.89	0.71	0.46		0.71	0.50	
		rt		0.45	0.71	0.89	1.0		0.50	0.71
10	3	lt	1.0	0.89	0.71	0.45				
		rt		0.45	0.71	0.89	1.0			
		srd						0.71	0.71	0.71
	4	lt	1.0	0.89	0.71	0.45				
		rt		0.45	0.71	0.89	1.0			
15	lt	srd						1.0	0.71	
	rt	srd							0.71	0.71
	4	lt	1.0	0.5						
		ctr		0.87	1.0	0.87				
		rt				0.5	1.0			
20		srd						0.71	0.71	0.71
	5	lt	1.0	0.5						
		ctr		0.87	1.0	0.87				
		rt				0.5	1.0			
	lt	srd						1.0	0.71	
25	rt	srd							0.71	1.0
	5	lt	1.0	0.5						
	lt	ctr		0.87	0.71					
	rt	ctr			0.71	0.87				
		rt				0.5	1.0			
30	lt	srd						1.0	0.71	
	rt	srd							0.71	1.0
	6	lt	1.0	0.5						
		ctr		0.86	1.0	0.86				
		rt				0.5	1.0			
35	lt	srd						1.0		
	ctr	srd							1.0	
	rt	srd								1.0

Table 9 (cont.)

7	lt	1.0							
	lt ctr		1.0						
	ctr			1.0					
5	rt ctr				1.0				
	rt					1.0			
	lt srd						1.0	0.71	
	rt srd							0.71	1.0
7	lt	1.0	0.5						
10	lt ctr		0.87	0.71					
	rt ctr			0.71	0.87				
	rt				0.5	1.0			
	lt srd						1.0		
	ctr srd							1.0	
15	rt srd								1.0
8	lt	1.0	0.5						
	lt ctr		0.87	0.71					
	rt ctr			0.71	0.87				
	rt				0.5	1.0			
20	lt 1 srd						0.87	0.35	
	lt 2 srd						0.5	0.61	
	rt 2 srd							0.61	0.50
	rt 2 srd							0.35	0.87

Generation of Lt Rt

In the case when the playback system has analog or digital surround multi-channel capability, a down matrix from 5, 4, or 3 channel to Lt Rt may be desirable. In the case when the number of decoded audio channels exceeds 5, 4 or 3 respectively a first stage down mix to 5, 4 or 3 chs should be used as described above.

The down matrixing equations for 5-channel source audio to a two-channel Lt Rt playback system are given by:

Left = left + 0.7*center - 0.7*(lt surround + rt surround)

Right = right + 0.7*center + 0.7*(lt surround + rt surround)

Embedded mixing to 2-channel

One concern arising from the proliferation of multi-channel audio systems is that most home systems presently have only two channel playback capability. To accommodate this a fixed 2-channel down matrix processes is commonly used following the multi-channel decoding stage. However, for music only applications the image quality etc. of the down matrixed signal may not match that of an equivalent stereo recording found on CD.

The concept of embedded mixing is to allow the producer to dynamically specify the matrixing coefficients within the audio frame itself. In this way the stereo down mix at the decoder may be better matched to a 2-channel playback environment.

CHS*2, 7-bit down mix indexes (MCOEFFS) are transmitted along with the multi-channel audio once in every frame. The indexes are converted to attenuation factors using a 7 bit LUT. The 2-ch down mix equations are as follows,

```
Left Ch = sum ( MCOEFF[n]*Ch[n] )              for n=1, CHS
Right Ch = sum ( MCOEFF[n+CHS]*Ch[n] )         for n=1, CHS
```

where Ch(n) represents the subband samples in the (n)th audio channel.

Dynamic Range Control Data

Dynamic range coefficients DCOEFF may be optionally embedded in the audio frame at the encoding stage. The purpose of this feature is to allow for the convenient compression of the audio dynamic range at the output of the decoder. Dynamic range compression 282 is particularly important in listening environments where high ambient noise levels make it impossible to discriminate low level signals without risking damaging the loudspeakers during loud passages. This problem is further compounded by the growing use of 20-bit PCM audio recordings which exhibit dynamic ranges as high as 110dB.

Depending on the window size of the frame (NBLKS) either one, two or four coefficients are transmitted per audio channel for any coding mode (DYNF). If a single coefficient is transmitted, this is used for the entire frame. With two coefficients the first is used for the first half of the frame and the second for the second half of the frame. Four coefficients are distributed over each frame quadrant. Higher time resolution is possible by interpolating between the transmitted values locally.

Each coefficient is 8-bit signed fractional Q2 binary, and represents a logarithmic gain value as shown in table (53) giving a range of +/- 31.75dB in steps of 0.25dB. The coefficients are ordered by channel number. Dynamic range compression is affected by multiplying the decoded audio samples by the linear coefficient.

The degree of compression can be altered with the appropriate adjustment to the coefficient values at the decoder or switched off completely by ignoring the coefficients.

32-band Interpolation Filterbank

The 32-band interpolation filter bank **44** converts the 32 subbands for each audio channel into a single PCM time domain signal (**step 284**). Non-perfect reconstruction coefficients (512-tap FIR filters) are used when FILTS=0. Perfect reconstruction coefficients are used when FILTS=1. Normally the cosine modulation coefficients will be pre-calc ulated and stored in ROM. The interpolation procedure can be expanded to reconstruct larger data blocks to reduce loop overheads. However, in the case of termination frames, the minimum resolution which may be called for is 32 PCM samples. The interpolation algorithm is as follows:

A) Create cosine modulation coefficients

B) Read in 32 new subband samples to array XIN

C) Multiply by cosine modulation coefficients and create temporary arrays SUM and DIFF.

D) Store history

E) Multiply by filter coefficients
F) Create 32 PCM output samples
G) Update working arrays
H) Output 32 new PCM samples

Lossless or near-lossless reconstruction requirements

Depending on the bit rate and the coding scheme in operation, the bit stream can specify either non-perfect or perfect reconstruction interpolation filter bank coefficients (FILTS). Since the encoder decimation filter banks are computed with 40-bit floating precision, the ability of the decoder to achieve the maximum theoretical reconstruction precision will depend on the source PCM word length and the precision of DSP core used to compute the convolutions and the way that the operations are scaled.

Low frequency Effects PCM interpolation

The audio data associated with the low-frequency effects channel is independent of the main audio channels. This channel is encoded using an 8-bit APCM process operating on a X128 decimated (120Hz bandwidth) 20-bit PCM input. The decimated effects audio is time aligned with the current subframe audio in the main audio channels. Hence, since the delay across the 32-band interpolation filterbank is 256 samples (512 taps), care must be taken to ensure that the interpolated low-frequency effect channel is also aligned with the rest of the audio channels prior to output. No compensation is required if the effects interpolation FIR is also 512 taps.

The LFT algorithm uses a 512 tap 128X interpolation FIR to execute **step 286** as follows:

1. Map 7-bit scale factor to rms.
2. Multiply by step-size of 7-bit quantizer.
3. Generate sub sample values from the normalized values.
4. Interpolate by 128 using a low pass filter such as that

given for each sub sample.

During termination frames the time resolution of the decimated effect samples is not sufficient to allow the low-frequency audio length to be adjusted in the decimated domain. The interpolation convolution can either be stopped at the appropriate point, or it can be completed and the surplus PCM samples deleted from the effects output buffer.

Auxiliary Data

Auxiliary data bytes AUXD may be optionally embedded in the frame at the encoding stage. The number of bytes in the array if given by the flag AUXCT.

Time Code Stamp

A time code word TIMES may be optionally embedded in the frame at the encoding stage. The 32 bit word consists of 5 fields each representing hours, minutes, seconds, frames, subframes as with the SMPTE time code format. The time code stamp represents the time measured at the start of the audio frame, at the encoder.

Field	Unit	Range
bits 0-7	subframes 1/80 frame	0 - 79
bits 8-13	frames (1/30 sec)	0 - 29
bits 14-19	seconds	0 - 59
bits 20-25	minutes	0 - 59
bits 26-31	hours	0 - 23

Sub-sampled audio interpolation

If the encoded bit stream has been produced using source PCM sampling rates lower than that available at the decoder then interpolation (**step 288**) of the PCM will be necessary to correct for the sample rate mis-match. The

specification assumes that decoder hardware sample rates of 32, 44.1 and 48kHz will all be mandatory and that encoding sub-sample rates will be limited to 8, 11.02, 12, 16, 22.05 and 24kHz. The procedure is similar to that shown for the low-frequency effects, except for the lower interpolation factor.

High frequency Sampled Audio Decoding

The present audio encoder is expandable to allow the encoding of audio data at frequencies above baseband (SFREQ) **290**. Decoders do not need to implement this aspect of the audio coder to be able to receive and properly decode audio data streams encoded with higher sample rates. The current specification separates the audio data required to decode the 'base-band' audio, i.e. 0-24kHz and that for the high frequency sampled audio, 24-48kHz or 24-96kHz. Since only encoded audio above 24kHz will reside in the OVER_AUDIO data array, decoders without the high frequency capability need only recognize the presence of this data array, and bypass it to remain compatible.

Output Sub-subframe PCM Samples

In step **291**, the reconstructed PCM samples for the current sub-subframe are output.

PCM output word length truncation

The word length of the source PCM audio input to the encoder is flagged at the decoder by PCMR. The purpose of transmitting this information is to allow for an improved truncation strategy **292** in decoders whose output PCM word length is less than PCMR. For example, if a ultra high quality 22-bit source audio is used to produce the encoded bit stream (PCMR=4) and the maximum decoder output word length is 20-bits, the reconstructed PCM would ordinarily be truncated to 20-bits. It is well known that rounding, dithering and recursive noise shaping schemes (ie UV22, Sony SBM etc) can make use of the extra bits in order to improve

the perceived quality of the truncated audio.

PCM Output Buffer strategies

The audio encoder data stream format specification is designed to reduce processing latencies and to minimize output buffer requirements. The core coding packet is the sub-subframe which consists normally of 256 PCM samples per channel. It is possible therefore to refresh the PCM output buffer every 256 output samples. However, to realize this advantage, a slightly higher processing overhead is entailed. Since in the time available to decode the first sub-subframe, additional processes such as subframe header and side information unpacking are performed, the time which remains to decode the 256 audio samples is less than that in following sub-subframes. If a higher decode latency and/or output buffer sizes are permissible then output PCM refreshing rates can be decreased to extend up to the maximum audio window encoded in the frame. This effectively averages out the computational load over a longer time and allows for a lowering in DSP processing cycle time.

Termination Frame management

The purpose of a termination frame is to allow the encoder to arbitrarily adjust the end of the coding window such that the coded audio object length matches, to within a sample period, the duration of the video object. In effect, a termination frame forces the encoder to use an arbitrary audio window size. Hence the length of the audio frame may not be devisable by the 256 sample sub-subframes. A partial sub-subframe (PSC) may be specified within a termination frame (FTYPE) and this may also include surplus samples (SURP). In this event the partial frame is decoded as normal, except using side information from the previous 256 sample sub-subframe. Finally, any surplus samples are deleted from the end of the reconstructed PCM array or held over to cross-fade into the next 256 sample array. Since the number of samples to be output in this instance is less

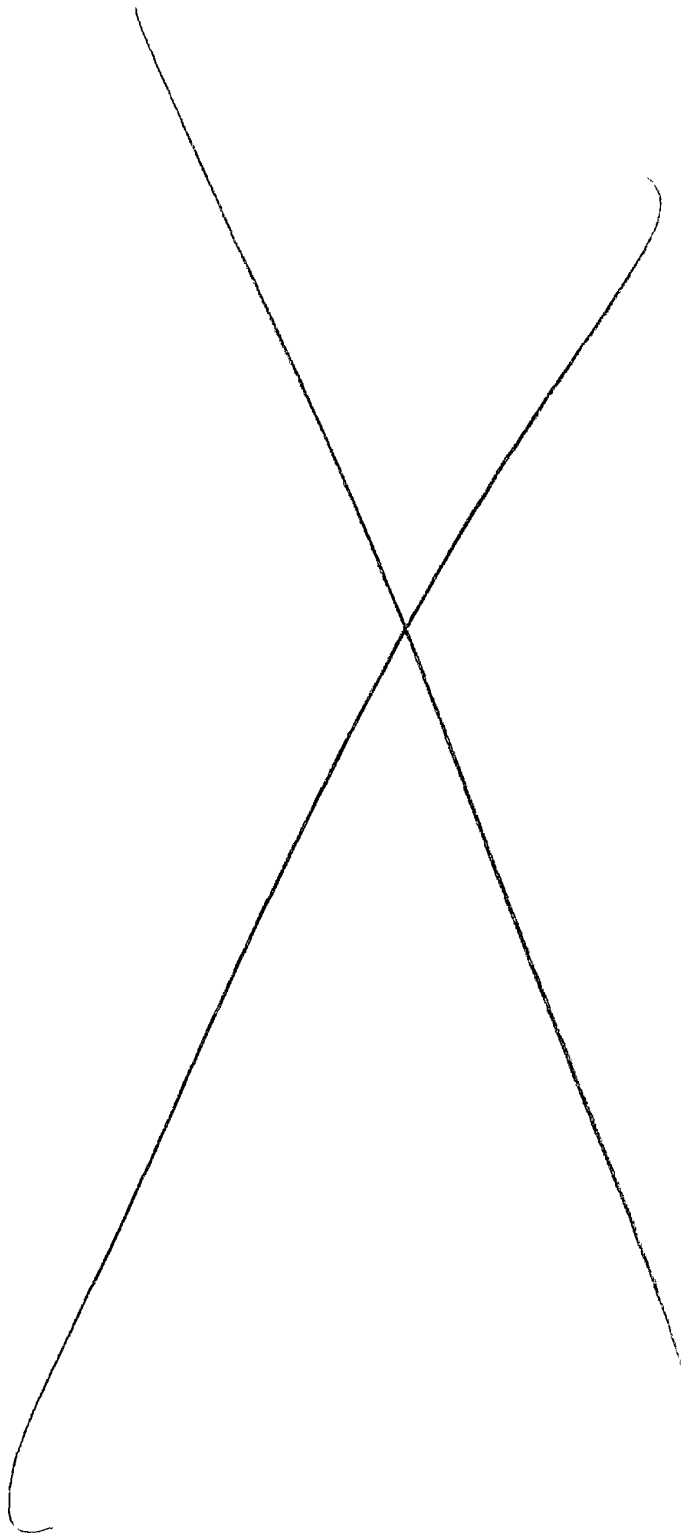

than 256, the output buffer 'empty' interrupt will need to be modified to reflect the smaller PCM array.

Decoder processing latency

The decoding processing latency (or delay) is defined as the time between the audio frame entering the decoder processor and the first PCM sample to leave. The latency depends on the way the audio frame is input to the decoder, the method of buffering the frame and the output buffering strategy deployed within.

Real-time Serial I/O

When the audio frame is input serially to the decoder at a rate equal to the bit rate of the data stream (real-time), the decoder is not permitted to begin processing the data until the frame has been completely loaded (an earlier entry point will be specified in later revisions). Assuming the input/and output is double buffered, the first sub-subframe is decoded and loaded to the idle output buffer over the 256 sample periods whicn follow. Hence the first PCM sample from the new frame appears at the output (((NBLKS+1)*32) + 256)/Fsamp seconds after the input frame first appeared at the decoder input (Fsamp=sampling rate of PCM). For arbitrary output buffers sizes the latency becomes (((NBLKS+1)*32)+output buffer size)/Fsamp seconds.

Burst serial input - Real-time serial output

In this case an improvement in latency is achieved since the time to load the input audio frame to the input buffer is reduced. The latency is now, (time to input audio frame to buffer)+(output buffer size/sample rate).

Parallel input - Real-time serial output

This configuration is identical to the burst serial input case in that the improvement over the real-time input depends on how must faster the input buffer can be loaded.

Real-time Management

Due to the real-time nature of the audio decoding process, certain considerations must be made relating to the handling of the I/O data, the buffer management and the coding modes. A flow chart of one possible decoder I/O implementation **294** is described in **Fig. 37**. In this example the audio is decoded and output for each and every sub-subframe. For example, in the case of a fixed audio frame which contains 4 subframes, within which 4 normal sub-subframes reside, the decoder will output 16 blocks of 256 samples (per channel) over the duration of each input frame. The critical real-time process is the time taken to decode the first sub-subframe of the first subframe, since the decoder must unpack the headers, subframe side information, as well as decode the 256 PCM samples. To a lesser extent the processing times for the first sub-subframes in the remaining subframes are also critical due to the additional side information unpacking overhead. If in the event that sub-subframe decoding process exceeds the time limit then, in the case of cyclic buffering, the last 256 sample block will be repeated. More importantly, if the decoder on processing all 16 blocks of 256 samples exceeds the input frame period then frame synchronization will be jeopardized and global muting of the outputs initiated.

Lossless and Variable real-time decoding

It is anticipated that lossless or variable decoding implementations will deploy appropriate buffers external to the decoder processor and that these buffers will be accessible using a fast input port. Real-time issues relating to variable rate decoding depend on specifications such as the maximum allowable frame (FSIZE) and encoding window sizes (NBLKS) against the number of audio channels (CHS) and source PCM word lengths (PCMR). These are currently being finalized and will be the subject of future drafts.

Bit error management strategies

This specification assumes that the bit error rate of the medium being used to transport or store the bit stream is extremely low. This is generally the case for LD, CDA, CD ROM, DVD and computer storage. Transmission systems such as ISDN, T1, E1 and ATM are also inherently error free.

The specification does include certain error detection and correction schemes in order to compensate for occasional errors.

Non vital data

The hflag, filts, chist, pcmr, unspec, auxd data only effect the audio fidelity and do not cause the audio to become unstable. Hence, this information would not normally need any protection from errors.

Majority Vote

Certain flags [amode, sfreq, rate, vernum] do not change often and any changes will usually occur when the audio is muted. These flags can effectively be averaged from frame to frame to check for consistency. If changes are detected, audio muting may be activated until the values re-stabilize.

Vital Data

In the audio frame header vital information includes ftype, surp, nblks, fsize, mix, dynf, dyct, time, auxcnt, lff. This information may change from frame to frame and cannot be averaged. To reduce error sensitivity the header data may be optionally Reed Solomon encoded with the HCRC check bytes. Otherwise the HCRC bytes should be ignored. If errors are detected and cannot be corrected decoding should proceed as normal since it is possible that the errors will not effect the decoding integrity. This can be checked later in the audio frame itself.

If optional header information is also included, this can be checked against the optional Reed Solomon check bytes

OCRC.

The audio coding frame contains certain coding headers [subs, thuff, shuff, bhuff, subs, chs, vqsub, sel5, sel7, sel9, sel13, sel17, sel25, sel33, sel65, sel129, joinx] which indicate the packet formatting of the side information and audio codes themselves. By definition these headers continually change from frame to frame and can only be reliably error corrected using the audio header Reed Solomon check bytes AHCRC. If errors were found but could not be corrected decoding may proceed since it is possible that the errors will not effect the decoding integrity. If checking is not performed, AHCRC bytes are ignored.

Finally the subframes themselves can be checked for errors in two ways.

1. If variable length coding (Huffman) is used to code the side information and/or the audio codes, then only error detection is possible. Detection is achieved using the DSYNC 16-bit synchronization word appended at the end of each subframe. On completion of the subframe unpacking the extraction array pointer should point to the first bit of DSYNC.

Case A: If un-correctable errors were detected in either the frame or audio headers and DSYNC has not been verified, it is recommended that the entire frame be aborted and all audio channels muted.

Case B: If un-correctable errors were detected in either the frame or audio headers and DSYNC is verified, it is recommended that the decoder output the subframe PCM as normal and proceed to the next subframe.

Case C: If no errors were detected in the frame and audio headers but DSYNC is not verified, the subframe audio should be muted and the unpacking of the next subframe started from the first bit following DSYNC.

Case D: If no errors were detected in the frame and audio headers and DSYNC is also verified, the decoder should proceed as normal.

Case E: If CRC checking was not performed on the frame or audio headers and DSYNC is verified, the decoder should proceed as normal.

Case F: If CRC checking was not performed on the frame or audio headers and DSYNC is not verified, the decoder should abort the entire frame and mute all channels.

2. If variable length coding (Huffman) is not used then the side information bytes can be checked using the SICRC Reed Solomon check bytes. The audio codes (AUDIO), low frequency effects (LFE) and high frequency sampled audio codes (OVER_AUDIO) are not specifically protected since the data itself is perceptually insensitive to minor error corruption. The DSYNC synchronization check can still be performed, however, on the audio subframes.

Case A: If un-correctable errors were detected in either the frame, audio headers or the side information and DSYNC has not been verified, it is recommended that the entire frame be aborted and all audio channels muted.

Case B: If un-correctable errors were detected in either the frame or audio headers and un-correctable errors were also detected in the side information the entire frame should be aborted.

Case C: If no errors were detected in the frame, audio headers or side information and DSYNC is also verified, the decoder should proceed as normal.

Case D: If CRC checking was not performed on any/all of the

frame, audio headers or side information and DSYNC is verified, the decoder should proceed as normal.

Case B: If CRC checking was not performed on any/all of the frame, audio headers or side information and DSYNC is not verified, the decoder should abort the frame.

Hardware Implementation

Figures 29, 30 and 31 describe the basic functional structure of the hardware implementation of a six channel version of the encoder and decoder for operation at 32, 44.1 and 48kHz sampling rates.

Referring to **Fig. 29**, Eight Analog Devices ADSP21020 40-bit floating point digital signal processor (DSP) chips **296** are used to implement a six channel digital audio encoder **298**. Six DSPs are used to encode each of the channels while the seventh and eighth are used to implement the "Global Bit Allocation and Management" and "Data Stream Formatter and Error Encoding" functions respectively. Each ADSP21020 is clocked at 33 MHz and utilize external 48bit X 32k program ram (PRAM) **300**, 40bit X 32k data ram (SRAM) **302** to run the algorithms. In the case of the encoders an 8bit X 512k EPROM **304** is also used for storage of fixed constants such as the variable length entropy code books. The data stream formatting DSP uses a Reed Solomon CRC chip **306** to facilitate error detection and protection at the decoder. Communications between the encoder DSPs and the global bit allocation and management is implemented using dual port static RAM **308**.

The encode processing flow is as follows. A 2-channel digital audio PCM data stream **310** is extracted at the output of each of the three AES/EBU digital audio receivers. The first channel of each pair is directed to CH1, 3 and 5 Encoder DSPs respectively while the second channel of each is directed to CH2, 4 and 6 respectively. The PCM samples are read into the DSPs by converting the serial PCM words to

parallel (s/p). Each encoder accumulates a frame of PCM samples and proceeds to encode the frame data as described previously. Information regarding the estimated difference signal (ed(n) and the subband samples (x(n)) for each channel is transmitted to the global bit allocation and management DSP via the dual port RAM. The bit allocation strategies for each encoder are then read back in the same manner. Once the encoding process is complete, the coded data and side information for the six channels is transmitted to the data stream formatter DSP via the global bit allocation and management DSP. At this stage CRC check bytes are generated selectively and added to the encoded data for the purposes of providing error protection at the decoder. Finally the entire data packet **16** is assembled and output.

FIG. 30 illustrates an audio mode control interface **312** to the encoder DSP implementation shown in **FIG. 29**. An additional controller DSP **314** is used to manage the RS232 **316** and key pad **318** interfaces and relay the audio mode information to both the global bit allocation and management and the data stream formatter DSPs. This allows parameters such as the desired bit rate of the coding system, the number of audio channels, the window size, the sampling rate and the transmission rate to be dynamically entered via the key pad or from a computer **320** through the RS232 port. The parameters are then shown on an LCD display **322**.

A six channel hardware decoder implementation is described in **Fig. 31**. A single Analog Devices ADSP21020 40-bit floating point digital signal processor (DSP) chip **324** is used to implement the six channel digital audio decoder. The ADSP21020 is clocked at 33 MHz and utilize external 48bit X 32k program ram (PRAM) **326**, 40bit X 32k data ram (SRAM) **328** to run the decoding algorithm. An additional 8bit X 512k EPROM **330** is also used for storage of fixed constants such as the variable length entropy and prediction coefficient vector code books.

The decode processing flow is as follows. The compressed data stream **16** is input to the DSP via a serial

to parallel converter (s/p) **332**. The data is unpacked and decoded as illustrated previously. The subband samples are reconstructed into a single PCM data stream **22** for each channel and output to three AES/EBU digital audio transmitter chips **334** via three parallel to serial converters (p/s) **335**.

While several illustrative embodiments of the invention have been shown and described, numerous variations and alternate embodiments will occur to those skilled in the art. For example, as processor speeds increase and the cost of memory is reduced, the sampling frequencies, transmission rates and buffer size will most likely increase. Such variations and alternate embodiments are contemplated, and can be made without departing from the spirit and scope of the invention as defined in the appended claims.

WE CLAIM:

1. A multi-channel audio encoder, comprising:

a frame grabber that applies an audio window to each channel of a multi-channel audio signal sampled at a sampling rate to produce respective sequences of audio frames;

a plurality of filters that split the channels' audio frames into respective pluralities of frequency subbands over a baseband frequency range, said frequency subbands each comprising a sequence of subband frames that have at least one subframe of audio data per subband frame;

a plurality of subband encoders that code the audio data in the respective frequency subbands a subframe at a time into encoded subband signals;

a multiplexer that packs and multiplexes the encoded subband signals into an output frame for each successive data frame thereby forming a data stream at a transmission rate; and

a controller that sets the size of the audio window based on the sampling rate and transmission rate so that the size of said output frames is constrained to lie in a desired range.

2. The multi-channel audio encoder of claim 1, wherein the controller sets the audio window size as the largest multiple of two that is less than

$$(\text{Frame Size}) * F_{samp} * \left(\frac{8}{T_{rate}}\right)$$

where Frame Size is the maximum size of the output frame, Fsamp is the sampling rate, and T_{rate} is the transmission rate.

3. The multi-channel audio encoder of claim 1, wherein said baseband frequency range has a maximum frequency, further comprising:

a prefilter that splits each of said audio frames

into a baseband signal and a high sampling rate signal at frequencies in the baseband frequency range and above the maximum frequency, respectively; and

a high sampling rate encoder that encodes the audio channels' high sampling rate signals into respective encoded high sampling rate signals,

said multiplexer packing the channels' encoded high sampling rate signals into the respective output frames so that the baseband and high sampling rate portions of the multi-channel audio signal are independently decodable.

4. The multi-channel audio encoder of claim 1, wherein each subband encoder codes the audio data in its subframes with associated side information and said multiplexer packs the encoded subframes and their side information into the output frames so that each successive subframe is independently decodable.

5. The multi-channel audio encoder of claim 4, wherein the multiplexer inserts an end-of-subframe code at the end of each subframe to provide an error check.

6. The multi-channel audio encoder of claim 1, wherein the multi-channel audio signal is encoded at a target bit rate and the subband encoders comprise predictive coders, further comprising:

a global bit manager (GBM) that computes a psychoacoustic signal-to-mask ratio (SMR) and an estimated prediction gain (P_{gain}) for each subframe, computes mask-to-noise ratios (MNRs) by reducing the SMRs by respective fractions of their associated prediction gains, allocates bits to satisfy each MNR, computes the allocated bit rate over all subbands, and adjusts the individual allocations such that the actual bit rate approximates the target bit rate.

7. The multi-channel audio encoder of claim 6,

wherein when the actual bit rate is less than the target bit rate, said GBM allocates the remaining bits according to a minimum mean-square-error scheme.

8. The multi-channel audio encoder of claim 1, wherein the subband encoder splits each subframe into a plurality of sub-subframes, each subband encoder comprising a predictive coder that generates and quantizes an error signal for each subframe, further comprising:

an analyzer that generates an estimated error signal prior to coding for each subframe, detects transients in each sub-subframe of the estimated error signal, generates a transient code that indicates whether there is a transient in any sub-subframe other than the first and in which sub-subframe the transient occurs, and when a transient is detected generates a pre-transient scale factor for those sub-subframes before the transient and a post-transient scale factor for those sub-subframes including and after the transient and otherwise generates a uniform scale factor for the subframe,

said predictive coder using said pre-transient, post-transient and uniform scale factors to scale the error signal prior to coding to reduce coding error in the sub-sub frames corresponding to the pre-transient scale factors.

9. The multi-channel audio encoder of claim 8, wherein the predictive coder adapts a quantization bit rate over the subframes in each of said subband frames and fixes the bit rate for all of the sub-subframes in each of said subframes.

10. A multi-channel audio encoder, comprising:

a frame grabber that applies an audio window to each channel of a multi-channel audio signal sampled at a sampling rate to produce respective sequences of audio frames, said audio frames having an audio bandwidth that extends from DC to approximately half the sampling rate;

a prefilter that splits each of said audio frames into baseband frames that represent a baseband portion of the audio bandwidth and high sampling rate frames that represent the remaining portion of the audio bandwidth;

a high sampling rate encoder that encodes the audio channels' high sampling rate frames into respective encoded high sampling rate signals;

a plurality of filters that split the channels' baseband frames into respective pluralities of frequency subbands, said frequency subbands each comprising a sequence of subband frames that have at least one subframe of audio data per subband frame;

a plurality of subband encoders that code the audio data in the respective frequency subbands a subframe at a time to produce encoded subband signals; and

a multiplexer that packs and multiplexes the encoded subband signals and high sampling rate signals into an output frame for each successive data frame thereby forming a data stream at a transmission rate so that the baseband and high sampling rate portions of the multi-channe l audio signal are independently decodeable.

11. The multi-channel audio encoder of claim 10, further comprising:

a controller that sets the size of the audio window based on the sampling rate and transmission rate so that the size of said output frames is constrained to lie in a desired range.

12. The multi-channel audio encoder of claim 11, wherein the controller sets the audio window size as the largest multiple of two that is less than

$$(\text{Frame Size}) * F_{samp} * \left(\frac{8}{T_{rate}}\right)$$

where Frame Size is the maximum size of the output frame, F_{samp} is the sampling rate, and T_{rate} is the transmission rate.

13. A multi-channel audio encoder, comprising:

a frame grabber that applies an audio window to each channel of a multi-channel audio signal sampled at a sampling rate to produce respective sequences of audio frames;

a plurality of filters that split the channels' successive data frames into respective pluralities of frequency subbands over a baseband frequency range, said frequency subbands each comprising a sequence of subband frames that have at least one subframe of audio data per subband frame;

a plurality of subband encoders that code the audio data in the respective frequency subbands a subframe at a time to produce encoded subband signals;

an analyzer that splits each subframe in the audio window into a plurality of sub-subframes, detects transients in each sub-subframe, generates a transient code that indicates whether there is a transient in any sub-subframe other than the first and in which sub-subframe the transient occurs, and when a transient is detected generates a pre-transient scale factor for those sub-subframes before the transient and a post-transient scale factor for those sub-subframes including and after the transient and otherwise generates a uniform scale factor for the subframe,

said subband encoders using said pre-transient, post-transient and uniform scale factors to scale the audio data in the respective portions of the subframes to reduce coding error in the sub-subframes corresponding to the pre-transient scale factors; and

a multiplexer that packs and multiplexes the encoded sound signals and the transient codes into an output frame for each successive data frame thereby forming a data stream at a transmission rate.

14. The multi-channel audio encoder of claim 13, wherein said multi-channel audio signal is encoded at a

known bit rate, said filter comprising non-perfect and perfect reconstruction filters that are used to split the audio frames when the known bit rate is respectively below and above a threshold bit rate with said multiplexer inserting a filter code into said data stream to indicate the selected filter.

15. The multi-channel audio encoder of claim 13, wherein said subband encoders comprise a predictor and a quantizer that generate and code an error signal for each subframe, said analyzer generating an estimated error signal from which it computes a prediction gain for each subframe and when the prediction gain is less than a threshold disabling the predictor so that the quantizer directly codes the audio data in the subframe.

16. The multi-channel audio encoder of claim 15, wherein the analyzer detects the transients in the subframe's audio data when the predictor is disabled and detects the transients in the subframe's error signal when the predictor is enabled so that the transients are detected in the signal that is encoded.

17. The multi-channel audio encoder of claim 13 wherein the subband encoders comprise:

a plurality of predictive coders that code the lower frequency subbands; and

a vector quantizer that codes the higher frequency subbands.

18. The multi-channel audio encoder of claim 17, wherein the vector quantizer codes all of the subbands above a threshold frequency.

19. The multi-channel audio encoder of claim 13, wherein the analyzer computes a transient content for the audio window based upon the transient detection in each

subframe, further comprising:

a global bit manager (GBM) that uses a psychoacoustic allocation scheme to assign coding bits to each subframe in the audio window, said GBM applying a perceptual analysis window to the channels' data frames to compute a signal-to-mask ratio (SMR) for each subframe associated with the audio window when the transient content is low and allocating bits based upon the SMRs and when the transient content exceeds a transient threshold the GBM disables the psychoacoustic allocation scheme and uses a minimum mean-square-error (mmse) routine over the audio window to allocate bits to all of the subframes.

20. The multi-channel audio encoder of claim 19 wherein the subband encoders comprise:

a plurality of predictive coders that code the lower frequency subbands; and

a vector quantizer that codes the higher frequency subbands, said GBM assigning those subbands whose SMRs are less than a psychoacoustic threshold and whose frequencies are greater than a frequency threshold to the vector quantizer.

21. A multi-channel audio encoder, comprising:

a frame grabber that applies an audio window to each channel of a multi-channel audio signal sampled at a sampling rate to produce respective sequences of audio frames;

a plurality of filters that split the channels' data frames into respective pluralities of frequency subbands over a baseband frequency range, said frequency subbands each comprising a sequence of subband frames that have at least one subframe of audio data per subband frame;

an analyzer that generates an estimated error signal from which it computes a prediction gain for each subframe;

a plurality of subband encoders that code the

audio data in the respective channels' frequency subbands into encoded subband signals, each subband encoder comprising:

a plurality of adaptive differential pulse code modulation (ADPCM) coders that encode the lower frequency subbands, said ADPCM coders' prediction capabilities being disabled when their respective prediction gains are less than a threshold gain thereby forming an adaptive pulse code modulation (APCM) coder that encodes the lower frequency bands; and

a plurality of vector quantizers (VQ) that encode the higher frequency bands; and

a multiplexer that packs and multiplexes the encoded subband signals into an output frame for each successive data frame thereby forming a data stream at a transmission rate.

22. The multi-channel audio encoder of claim 21, wherein the vector quantizer codes all of the subbands above a threshold frequency.

23. The multi-channel audio encoder of claim 21, wherein said baseband frequency range has a maximum frequency, further comprising:

a prefilter that splits each of said audio frames into a baseband signal and a high sampling rate signal at frequencies in the baseband frequency range and above the maximum frequency, respectively; and

a high sampling rate encoder that encodes the audio channels' high sampling rate signals into respective encoded high sampling rate signals,

said multiplexer packing th. channels' encoded high sampling rate signals into the respective output frames so that the baseband and high sampling rate portions of the multi-channel audio signal are independently decodable.

24. The multi-channel audio encoder of ciaim 21,

wherein the multi-channel audio signal is encoded at a target bit rate, further comprising:

a global bit manager (GBM) that computes a psychoacoustic signal-to-mask ratio (SMR) for each subframe, and when the ADPCM coder is enabled modifies the SMRs by respective fractions of their associated prediction gains, allocates bits to satisfy each SMR, computes the allocated bit rate over all subbands, and adjusts the individual allocations such that the actual bit rate approximates the target bit rate.

25. The multi-channel audio encoder of claim 24, wherein the subband encoder splits each subframe into a plurality of sub-subframes, further comprising:

an analyzer that detects transients in the estimated error signal when the ADPCM coder is enabled and in the audio data when the APCM coder is enabled in each sub-subframe, generates a transient code that indicates whether there is a transient in any sub-subframe other than the first and in which sub-subframe the transient occurs, and when a transient is detected generates a pre-transient scale factor for those sub-subframes before the transient and a post-transient scale factor for those sub-subframes including and after the transient and otherwise generates a uniform scale factor for the subframe,

said ADPCM and APCM coders using said pre-transien t, post-transient and uniform scale factors to scale the error signal and audio data, respectively, prior to coding to reduce coding error in the sub-subframes corresponding to the pre-transient scale factors.

26. A multi-channel audio encoder that encodes a multi-channel audio signal at a known bit rate, comprising:

a frame grabber that applies an audio window to each channel of a multi-channel audio signal sampled at a sampling rate to produce respective sequences of audio frames;

a plurality of filters each comprising non-perfect and perfect reconstruction filters that split the audio frames into respective pluralities of frequency subbands over a baseband frequency range when the known bit rate is respectively below and above a threshold bit rate, said frequency subbands each comprising a sequence of subband frames that have at least one subframe of audio data per subband frame;

a plurality of subband encoders that code the audio data in the respective frequency bands a subframe at a time into encoded subband signals; and

a multiplexer that packs and multiplexes the encoded subband signals and filter selection code into an output frame for each successive data frame thereby forming a data stream at a transmission rate.

27. The multi-channel audio encoder of claim 26, wherein said baseband frequency range has a maximum frequency, further comprising:

a prefilter that splits each of said audio frames into a baseband signal that is applied to the filters and a high sampling rate signal at frequencies in the baseband frequency range and above the maximum frequency, respectively; and

a high sampling rate encoder that encodes the audio channels' high sampling rate signals into respective encoded high sampling rate signals,

said multiplexer packing the channels' encoded high sampling rate signals into the respective output frames so that the baseband and high sampling rate portions of the multi-channel audio signal are independently decodable.

28. The multi-channel audio encoder of claim 27, further comprising:

a controller that sets the size of the audio window as the largest multiple of two that is less than

$$(\text{Frame Size}) * F_{samp} * (\frac{8}{T_{rate}})$$

where Frame Size is the maximum size of the output frame, F_{samp} is the sampling rate, and T_{rate} is the transmission rate so that the size of said output frames is constrained to lie between a minimum size and the maximum size.

29. A multi-channel audio encoder, comprising:

a frame grabber that applies an audio window to each channel of a multi-channel audio signal sampled at a sampling rate to produce respective sequences of audio frames;

a plurality of filters that split the channels' audio frames into respective pluralities of frequency subbands over a baseband frequency range, said frequency subbands each comprising a sequence of subband frames that have at least one subframe of audio data per subband frame;

a global bit manager (GBM) that computes a psychoacoustic signal-to-mask ratio (SMR) and an estimated prediction gain (P_{gain}) for each subframe, computes mask-to-noise ratios (MNRs) by reducing the SMRs by respective fractions of their associated prediction gains, allocates bits to satisfy each MNR, computes an allocated bit rate over the subbands, and adjusts the individual allocations such that the allocated bit rate approximates a target bit rate;

a plurality of subband encoders that code the audio data in the respective frequency subbands a subframe at a time in accordance with the bit allocation to produce encoded subband signals; and

a multiplexer that packs and multiplexes the encoded subband signals and bit allocation into an output frame for each successive data frame thereby forming a data stream at a transmission rate.

30. The multi-channel audio encoder of claim 29,

wherein the fractions vary from zero at zero bits to one at sufficiently high bit rates such that zero bits are allocated to a particular subframe only when its SMR is less than zero.

31. The multi-channel audio encoder of claim 29, wherein the GBM allocates the remaining bits according to a minimum mean-square-error (mmse) scheme when the allocated bit rate is less than the target bit rate.

32. The multi-channel audio encoder of claim 31, wherein the GBM calculates a root-mean-square (RMS) value for each subframe and when the allocated bit rate is less than the target bit rate, the GBM reallocates all of the available bits according to the mmse scheme as applied to the RMS values until the allocated bit rate approximates the target bit rate.

33. The multi-channel audio encoder of claim 31, wherein the GBM calculates a root-mean-square (RMS) value for each subframe and allocates all of the remaining bits according to the mmse scheme as applied to the RMS values until the allocated bit rate approximates the target bit rate.

34. The multi-channel audio encoder of claim 31, wherein the GBM calculates a root-mean-square (RMS) value for each subframe and allocates all of the remaining bits according to the mmse scheme as applied to the differences between the subframe's RMS and MNR values until the allocated bit rate approximates the target bit rate.

35. The multi-channel audio encoder of claim 31, wherein to allocate the remaining bits the GBM first computes a root-mean-square (RMS) value for each subframe, computes an average RMS value for each channel, and then apportions the target bit rate into channel bit rates based

upon the average RMS values, and second allocates bits to the subframes according to the mmse scheme as applied to the RMS values until each channel's allocated bit rate approximates the respective channel bit rates.

36. The multi-channel audio encoder of claim 31, wherein when the allocated bit rate is greater than the target bit rate the GBM uses a joint frequency coding scheme that encodes a sum of the upper subbands from two or more audio channels.

37. The multi-channel audio encoder of claim 29, wherein said GBM applies a perceptual analysis window to the channels' audio frames to compute the SMRs, further comprising:

an analyzer that splits each subframe into a plurality of sub-subframes, detects transients in each sub-subframe, generates a transient code that indicates whether there is a transient in any sub-subframe other than the first and in which sub-subframe the transient occurs, and when a transient is detected generates a pre-transient scale factor for those sub-subframes before the transient and a post-transient scale factor for those sub-subframes including and after the transient and otherwise generates a uniform scale factor for the subframe, the analyzer also computing a transient content for the audio window based upon the transient detection in each subframe,

said GBM disabling the psychoacoustic allocation scheme and uses a minimum mean-square-error (mmse) routine over the audio window to allocate bits to all of the subframes when the transient content is above a transient threshold,

said subband encoders using said pre-transient, post-transient and uniform scale factors to scale the respective portions of the subframes to reduce coding error in the sub-subframes corresponding to the pre-transient scale factors.

38. The multi-channel audio encoder of claim 37, wherein the subband encoders comprise:

a plurality of predictive coders that code the lower frequency subbands; and

a vector quantizer that codes the higher frequency subbands, said GBM assigning those subband whose SMR is less than a psychoacoustic threshold and whose frequency is greater than a frequency threshold to the vector quantizer.

39. A multi-channel audio encoder, comprising:

a frame grabber that applies an audio window to each channel of a multi-channel audio signal sampled at a sampling rate to produce respective sequences of audio frames;

a plurality of filters that split the channels' data frames into respective pluralities of frequency subbands over a baseband frequency range, said frequency subbands each comprising a sequence of subband frames that have at least one subframe of audio data per subband frame;

a global bit manager (GBM) that computes a psychoacoustic signal-to-mask ratio (SMR) for each subframe, allocates bits to satisfy each SMR, computes an allocated bit rate over the subbands, and when the allocated bit rate is less than a target bit rate uses a minimum mean-square-error (mmse) routine to allocate the remaining bits;

a plurality of subband encoders that code the audio data in the respective frequency bands a subframe at a time in accordance with the bit allocation to produce encoded subband signals; and

a multiplexer that packs and multiplexes the encoded subband signals and bit allocation into an output frame for each successive data frame thereby forming a data stream at a transmission rate.

40. The multi-channel audio encoder of claim 39, wherein the GBM calculates a root-mean-square (RMS) value

for each subframe and allocates the remaining bits according to the mmse scheme as applied to the RMS values until the allocated bit rate approximates the target bit rate.

41. The multi-channel audio encoder of claim 31, wherein the GBM calculates a root-mean-square (RMS) value for each subframe and allocates the remaining bits according to the mmse scheme as applied to the differences between the subframe's RMS and SMR values until the allocated bit rate approximates the target bit rate.

42. A multi-channel fixed distortion variable rate audio encoder, comprising:

a programmable controller for selecting one of a fixed perceptual distortion and a fixed minimum mean-square-error (mmse) distortion;

a frame grabber that applies an audio window to each channel of a multi-channel audio signal sampled at a sampling rate to produce respective sequences of audio frames;

a plurality of filters that split the channels' audio frames into respective pluralities of frequency subbands over a baseband frequency range, said frequency subbands each comprising a sequence of subband frames that have at least one subframe of audio data per subband frame;

a global bit manager (GBM) that responds to the distortion selection by selecting from an associated mmse scheme that computes a root-mean-square (RMS) value for each subframe and allocates bits to subframes based upon the RMS values until the fixed mmse distortion is satisfied and from a psychoacoustic scheme that computes a signal-to-mask ratio (SMR) and an estimated prediction gain (P_{gain}) for each subframe, computes mask-to-noise ratios (MNRs) by reducing the SMRs by respective fractions of their associated prediction gains, and allocates bits to satisfy each MNR;

a plurality of subband encoders that code the audio data in the respective frequency bands a subframe at a

time in accordance with the bit allocation to produce encoded subband signals; and

a multiplexer that packs and multiplexes the encoded subband signals and bit allocation into an output frame for each successive data frame thereby forming a data stream at a transmission rate.

43. The multi-channel audio encoder of claim 42, wherein said baseband frequency range has a maximum frequency, further comprising:

a prefilter that splits each of said audio frames into a baseband signal and a high sampling rate signal at frequencies in the baseband frequency range and above the maximum frequency, respectively, said GBM allocating bits to the high sampling rate signal to satisfy the selected fixed distortion; and

a high sampling rate encoder that encodes the audio channels' high sampling rate signals into respective encoded high sampling rate signals,

said multiplexer packing the channels' encoded high sampling rate signals into the respective output frames so that the baseband and high sampling rate portions of the multi-channel audio signal are independently decodable.

44. The multi-channel audio encoder of claim 42, further comprising:

a controller that sets the size of the audio window based on the sampling rate and transmission rate so that the size of said output frames is constrained to lie in a desired range.

45. An article of manufacture, comprising:

a portable machine readable storage medium; and

a digital data stream representing a multi-channel audio signal sampled at a sampling rate, encoded over a baseband range that is subdivided into individual frequency subbands and over a high sampling rate frequency range, and

written onto said portable machine readable storage medium as a sequence of audio frames at a transmission rate, each of said audio frames, comprising in order:

a sync word;

a frame header that includes a window size that indicates a number of audio samples in the audio frame and a frame size that indicates a number of bytes in the audio frame, said audio window size being set as a function of the ratio of the transmission rate to the sampling rate so that the frame size is constrained to be less than a maximum size;

an audio header that indicates a packing arrangement and a coding format for the audio frame;

at least one audio subframe, each audio subframe comprising:

side information for decoding the audio subframe without reference to any other subframe;

a plurality of baseband audio sub-subfr ames, in which audio data for each channel's frequency subbands is packed and multiplexed with the other channels;

a high sampling rate audio block, in which audio data in the high sampling rate frequency range for each channel is packed and multiplexed with the other channels so that the multi-channel audio signal is decodable at a plurality of decoding sampling rates; and

an unpack sync for verifying the end of the subframe.

46. The article of manufacture of claim 45, wherein said frame header further includes a filter code that identifies one of a perfect reconstruction filter and a non-perfect reconstruction filter for combining the encoded subbands into respective reconstructed audio channels.

47. The article of manufacture of claim 45, wherein said frequency subbands are encoded by switching between adaptive pulse code modulation (APCM) and adaptive

differential pulse code modulation coders (ADPCM) on the fly, the side information including a prediction mode (PMODE) for each subband in each channel that identifies one of the APCM and ADPCM coders.

48. The article of manufacture of claim 45, wherein said side information comprises:

at least one scale factor for each subband in each channel; and

a transient mode (TMODE) for each subband in each channel that identifies the number of scale factors and their associated sub-subframes.

49. The article of manufacture of claim 48, wherein there are four sub-subframes per subframe and TMODE is a two bit code.

50. The article of manufacture of claim 48, wherein said side information further comprises a bit allocation table for each channel's subbands, in which each subband's bit rate is fixed over the subframe.

51. The article of manufacture of claim 45, wherein the audio data in the sub-subframes corresponds to the lower frequency subbands, said audio frame further comprising a vector quantizated (VQ) code block for the higher frequency subbands, said audio header including a VQ code that identifies a start subband for the VQ code block.

52. The article of manufacture of claim 45, wherein the audio header includes a joint frequency coding (JFC) index (JOINX) that indicates whether JFC is enabled and wherein the sub-subframe the audio data is positioned.

53. The article of manufacture of claim 45, wherein the baseband frequency range extends from DC to a first break frequency and the high sampling rate frequency range

extends from the first break frequency to one-half the sampling rate, said plurality of decoding sampling rates having a minimum rate of twice the first break frequency and a maximum rate equal to the sampling rate.

54. The article of manufacture of claim 53, wherein the high sampling rate frequency range is subdivided into a plurality of frequency subranges at successively higher break frequencies, said decoder sampling rate being equal to one of said break frequencies.

55. The article of manufacture of claim 45, wherein said portable machine readable storage medium is one of a CD, a laser disk, a digital audio tape and a digital video disk (DVD).

56. A multi-channel audio decoder for reconstructing multiple audio channels up to a decoder sampling rate from a data stream, in which each audio channel was sampled at an encoder sampling rate that is at least as high as the decoder sampling rate, subdivided into a plurality of frequency subbands, compressed and multiplexed into the data stream at a transmission rate, comprising:

an input buffer for reading in and storing the data stream a frame at a time, each of said frames including a sync word, a frame header, an audio header, and at least one subframe, which includes audio side information, a plurality of sub-subframes having baseband audio codes over a baseband frequency range, a block of high sampling rate audio codes over a high sampling rate frequency range, and an unpack sync;

a demultiplexer that a) detects the sync word, b) unpacks the frame header to extract a window size that indicates a number of audio samples in the frame and a frame size that indicates a number of bytes in the frame, said window size being set as a function of the ratio of the transmission rate to the encoder sampling rate so that the

frame size is constrained to be less than the size of the input buffer, c) unpacks the audio header to extract the number of subframes in the frame and the number of encoded audio channels, and d) sequentially unpacks each subframe to extract the audio side information, demultiplex the baseband audio codes in each sub-subframe into the multiple audio channels and unpack each audio channel into its subband audio codes, demultiplex the high sampling rate audio codes into the multiple audio channels up to the decoder sampling rate and skip the remaining high sampling rate audio codes up to the encoder sampling rate, and detects the unpack sync to verify the end of the subframe;

a baseband decoder that uses the side information to decode the subband audio codes into reconstructed subband signals a subframe at a time without reference to any other subframes;

a baseband reconstruction filter that combines each channel's reconstructed subband signals into a reconstructed baseband signal a subframe at a time;

a high sampling rate decoder that uses the side information to decode the high sampling rate audio codes into a reconstructed high sampling rate signal for each audio channel a subframe at a time; and

a channel reconstruction filter that combines the reconstructed baseband and high sampling rate signals into a reconstructed multi-channel audio signal a subframe at a time.

57. The multi-channel audio decoder of claim 56, wherein the baseband reconstruction filter comprises a non-perfect reconstruction (NPR) filterbank and a perfect reconstruction (PR) filterbank, and said frame header includes a filter code that selects one of said NPR and PR filterbanks.

58. The multi-channel audio decoder of claim 56, wherein the baseband decoder comprises a plurality of

inverse adaptive differential pulse code modulation (ADPCM) coders for decoding the respective subband audio codes, said side information including prediction coefficients for the respective ADPCM coders and a prediction mode (PMODE) for controlling the application of the prediction coefficients to the respective ADPCM coders to selectively enable and disable their prediction capabilities.

59. The multi-channel audio decoder of claim 56, whe rein said side information comprises:

a bit allocation table for each channel's subbands, in which each subband's bit rate is fixed over the subframe;

at least one scale factor for each subband in each channel; and

a transient mode (TMODE) for each subband in each channel that identifies the number of scale factors and their associated sub-subframes, said baseband decoder scaling the subbands' audio codes by the respective scale factors in accordance with their TMODEs to facilitate decoding.

60. The multi-channel audio decoder of claim 56, wherein said baseband decoder comprises:

an inverse predictive coder for decoding the lower frequency subbands; and

an inverse vector quantizer (VQ) for decoding the higher frequency subbands.

61. The multi-channel audio decoder of claim 56, wherein the baseband frequency range extends from DC to a first break frequency, the high sampling rate frequency range extends from the first break frequency to one-half the encoder sampling rate, and the decoder sampling rate lies between twice the first break frequency and the encoder sampling rate.

62. The multi-channel audio decoder of claim 61, wherein the high sampling rate frequency range is subdivided into a plurality of frequency subranges at successively higher break frequencies, said decoder sampling rate being equal to one of said break frequencies.

63. The multi-channel audio decoder of claim 56, wherein said audio header includes a joint frequency coding (JFC) index that indicates whether JFC is enabled, which subbands are joint frequency coded, and in which audio channel the subband audio code is located, further comprising:

a JFC controller that responds to the JFC index by directing the baseband audio codes for the designated subbands from the one designated audio channel to the other JFC channels.

64. A multi-channel audio decoder for reconstructing multiple audio channels from a data stream, in which each audio channel was sampled at an encoder sampling rate, subdivided into a plurality of frequency subbands, compressed and multiplexed into the data stream, comprising:

an input buffer for reading in and storing the data stream a frame at a time, each of said frames including a sync word, a frame header, an audio header, and at least one subframe, which includes a block of baseband audio codes over a baseband frequency range, a block of high sampling rate audio codes over an high sampling rate frequency range, and an unpack sync;

a demultiplexer that a) detects the sync word, b) unpacks the frame header to extract an encoder sampling rate, c) unpacks the audio header to extract a packing arrangement and a coding format for the audio frame, and d) successively unpacks each subframe by demultiplexing each block of baseband audio codes into the multiple audio channels and unpacking each audio channel into its subband audio codes, demultiplexing the block of high sampling rate

audio codes into the multiple audio channels up to a decoder sampling rate and skipping the remaining high sampling rate audio codes up to the encoder sampling rate, and detecting the unpack sync to verify the end of the subframe;

a baseband decoder that decodes the subband audio codes into respective reconstructed subband signals a subframe at a time;

a baseband reconstruction filter that combines each channel's reconstructed subband signals into a reconstructed baseband signal a subframe at a time;

a high sampling rate decoder that decodes the high sampling rate audio codes into a reconstructed high sampling rate signal for each audio channel a subframe at a time; and

a channel reconstruction filter that combines the reconstructed baseband and high sampling rate signals into a reconstructed multi-channel audio signal a subframe at a time.

65. The multi-channel audio decoder of claim 64, wherein the baseband frequency range extends from DC to a first break frequency and the high sampling rate frequency range is subdivided into a plurality of frequency subranges at successively higher break frequencies, said decoder sampling rate being equal to one of said break frequencies.

66. The multi-channel audio decoder of claim 64, wherein each subframe includes side information for that subframe and only that subframe so that the baseband and high sampling rate decoders decode the subband audio codes and high sampling rate audio codes, respectively, a subframe at a time without reference to any of the other subframes.

67. A method for encoding a multi-channel audio signal sampled at a sampling rate, comprising:

applying an audio window to each channel of a multi-channel audio signal to produce respective sequences of audio frames;

splitting the channels' audio frames into respective pluralities of frequency subbands over a baseband frequency range, said frequency subbands each comprising a sequence of subband frames that have at least one subframe of audio data per subband frame;

encoding the audio data in the respective frequency subbands a subframe at a time into encoded subband signals; and

multiplexing the encoded subband signals into an output frame for each successive audio frame to generate a data stream at a transmission rate, the size of said audio window being selected based on the ratio of the transmission rate to the sampling rate so that the size of said output frames is constrained to lie in a desired range.

68. The method of claim 67, wherein the encoded subband signals are packed into the output frame a subframe at a time so that each successive subframe is decodable without reference to any other subframe.

69. The method of claim 67, wherein the multiplexing step inserts an end-of-subframe code at the end of each subframe to provide an error check.

70. The method of claim 67, wherein the step of encoding the frequency subbands comprises:

splitting each subframe into a plurality of sub-subframes;

generating an estimated error signal for the subframe;

detecting transients in each sub-subframe of the estimated error signal;

generating a transient code that indicates whether there is a transient in any sub-subframe other than the first and in which sub-subframe occurs;

generating a pre-transient scale factor for those sub-subframes before the transient and a post-transient

scale factor for those sub-subframes including and after then transient when a transient is detected and otherwise generating a uniform scale factor for the subframe;

generating an error signal for the current subframe;

scaling the error signal in accordance with the pre-transient, post-transient and uniform scale factors; and

quantizing the scaled error signal at a fixed bit rate over the current subframe.

71. A method for encoding a multi-channel audio signal sampled at a sampling rate, comprising:

applying an audio window to each channel of a multi-channel audio signal to produce respective sequences of audio frames, said audio frames having an audio bandwidth that extends from DC to approximately half the sampling rate;

splitting each of said audio frames into baseband frames that represent a baseband portion of the audio bandwidth and high sampling rate frames that represent the remaining portion of the audio bandwidth;

encoding the high sampling rate frames into respective high sampling rate signals;

splitting the channels' baseband frames into respective pluralities of frequency subbands, said frequency subbands each comprising a sequence of subband frames that have at least one subframe of audio data per subband frame;

encoding the audio data in the respective frequency bands a subframe at a time into encoded subband signals; and

multiplexing the encoded subband signals and high sampling rate signals into an output frame for each successive data frame to generate a data stream at a transmission rate in which the baseband and high sampling rate portions of the multi-channel audio signal are independently decodable.

72. The method of claim 71, further comprising the step of:

setting the size of the audio window based on a ratio of the transmission rate to the sampling rate so that the size of said output frame is constrained to lie in a desired range.

73. The method of claim 71, wherein the baseband frequency range extends from DC to a first break frequency, further comprising the step of:

subdividing the remaining portion of the audio bandwidth into a plurality of frequency subranges at successively higher break frequencies so that the multi-chan nel audio signal is decodable at any one of said break frequencies.

74. A method for encoding a multi-channel audio signal sampled at a sampling rate, comprising:

a) applying an audio window to each channel of a multi-channel audio signal to produce respective sequences of audio frames;

b) splitting the channels' data frames into respective pluralities of frequency subbands over a baseband frequency range, said frequency subbands each comprising a sequence of subband frames whose audio signals are subdivided into at least one subframe of audio data per subband frame;

c) encoding the audio data in the respective frequency subbands' audio signals a subframe at a time into encoded subband signals by:

splitting the subframe into a plurality of sub-subframes;

detecting transients in each sub-subframe;

generating a transient code that indicates whether there is a transient in any sub-subframe other than the first and in which sub-subframe occurs;

generating a pre-transient scale factor for

those sub-subframes before the transient and a post-transien t scale factor for those sub-subframes including and after then transient when a transient is detected and otherwise generating a uniform scale factor for the subframe;

scaling the sub-subframes in accordance with the pre-transient, post-transient and uniform scale factors; and

quantizing the scaled sub-subframes at a fixed bit rate over the current subframe to generate the encoded subband signal; and

d) multiplexing the encoded subband signals into an output frame for each successive data frame to generate a data stream at a transmission rate.

75. The method of claim 74, wherein said multi-channel audio signal is encoded at a known bit rate, the step of splitting the channels' audio frames comprising:

selecting a non-perfect filter bank to split the channels' audio frames when the known bit rate is below a threshold bit rate; and

selecting a perfect filter bank to split the channels' audio frames when the known bit rate is above the threshold bit rate.

76. The method of claim 74, wherein the step of encoding the frequency bands further comprises:

disabling the quantization step and predicting an estimated analysis signal for the current subframe from previously quantized subframes;

subtracting the estimated analysis signal from the subframe's audio signal to generate an estimated error signal;

computing a prediction gain from the subframe's audio signal and estimated error signal;

when the prediction gain is less than a threshold,

detecting the transients in the subframe audio signals; and

scaling and quantizing the subframe audio signals; and

when the prediction gain is greater than the threshold;

detecting the transients in the subframe's estimated error signal;

enabling the quantization step and predicting an estimated audio signal for the current subframe from previously quantized subframes;

subtracting the estimated audio signal from the subframe's audio signal to generate a error coding signal; and

scaling and quantizing the error coding signals.

77. The method of claim 74, wherein the lower frequency subbands are encoded in step c, further comprising:

vector quantizing the remaining higher frequency subbands.

78. The method of claim 74, further comprising:

computing a transient content for audio window based upon the transient detection in each subframe;

when the transient content is low,

applying a perceptual analysis window to the channels' audio frames;

computing a signal-to-mask ration (SMR) for each subframe associated with the audio window; and

allocating bits for quantizing the scaled sub-subframes based upon the SMRs; and

when the transient content is high,

allocating bits for quantizing the scaled sub-subframes based upon a minimum mean-square-error analysis.

79. A method for encoding a multi-channel audio signal

sampled at a sampling rate, comprising:

applying an audio window to each channel of a multi-channel audio signal to produce respective sequences of audio frames;

splitting the channels' data frames into respective pluralities of frequency subbands over a baseband frequency range, said frequency subbands each comprising a sequence of subband frames that have at least one subframe of audio data per subband frame;

generating a bit allocation for the subframes in the audio window by:

computing a psychoacoustic signal-to-mask ratio (SMR) for each subframe;

allocating bits to satisfy each subframe's SMR;

computing an allocated bit rate for all of the subframes; and

when the allocated bit rate is less than a target bit rate, allocating the remaining bits to the subframes in accordance with a minimum mean-square-error (mmse) scheme;

encoding the audio data in the respective frequency subbands a subframe at a time in accordance with the bit allocation to produce encoded subband signals; and

multiplexing the encoded subband signals into an output frame for each successive data frame to generate a data stream at a transmission rate.

80. The method of claim 79, wherein the frequency subbands are encoded with a predictive coder, the step of generating the bit allocation, further comprising:

computing an estimated prediction gain for each subframe, and

reducing the SMRs by respective fractions of their associated estimated prediction gains.

81. The method of claim 79, wherein the step of

allocating the remaining bits comprises:

computing a root-mean-square (RMS) value for each subframe;

reallocating all of the available bits according to the mmse scheme as applied to the RMS values until the allocated bit rate approximates the target bit rate.

82. The method of claim 79, wherein the step of allocating the remaining bits comprises:

computing a root-mean-square (RMS) value for each subframe;

allocating all of the remaining bits according to the mmse scheme as applied to the RMS values until the allocated bit rate approximates the target bit rate.

83. The method of claim 79, wherein the step of allocating the remaining bits comprises:

computing a root-mean-square (RMS) value for each subframe;

allocating all of the remaining bits according to the mmse scheme as applied to the differences between the subframe's RMS and SMR values until the allocated bit rate approximates the target bit rate.

84. A method for reconstructing a multi-channel audio signal from a stream of encoded audio frames, in which each audio frame includes a sync word, a frame header, an audio header, and at least one subframe, which includes audio side information, a plurality of sub-subframes having baseband audio codes over a baseband frequency range, a block of high sampling rate audio codes over a high sampling rate frequency range, and an unpack sync, the method for reconstructing each audio frame comprising;

detecting the sync word;

unpacking the frame header to extract a frame size that indicates the number of bytes in the frame, a window size that indicates a number of audio samples in the

audio frame, and an encoder sampling rate;

unpacking the audio header to extract the number of subframes and the number of audio channels;

sequentially unpacking each subframe by:

extracting the audio side information,

demultiplexing the baseband audio codes in each sub-subframe into the multiple audio channels,

unpacking each of the demultiplexed audio channels into a plurality of subband audio codes at respective subband frequencies,

unpacking the high sampling rate audio codes up to a decoder sampling rate,

skipping the remaining high sampling rate audio codes up to the encoder sampling rate, and

detecting the unpack sync to verify the end of the subframe;

decoding the subband audio codes in accordance with their side information to generate reconstructed subband signals a subframe at a time without reference to any other subframe;

combining the channels' reconstructed subband signals into respective reconstructed baseband signals a subframe at a time;

decoding the unpacked high sampling rate audio codes in accordance with their side information to generate reconstructed high sampling rate signals for each audio channel a subframe at a time; and

combining the reconstructed baseband and high sampling rate signals into a reconstructed multi-channel audio signal a subframe at a time.

85. The method of claim 84, wherein the step of combining the channels' reconstructed subband signals comprises:

unpacking the frame header to extract a reconstruction filter code

selecting a non-perfect filter bank to combine the

channels' data frames when indicated by the reconstruction filter code; and

selecting a perfect filter bank to split the channels' data frames when indicated by the reconstruction filter code.

86. The method of claim 84, wherein the subband audio codes are decoded in accordance with an inverse adaptive differential pulse code modulation (ADPCM) scheme, further comprising:

extracting a sequence of prediction coefficients from the side information;

extracting a prediction mode (PMODE) for each subband audio code;

controlling the application of the prediction coefficients to the different ADPCM schemes in accordance with the PMODEs to selectively enable and disable their prediction capabilities.

87. The method of claim 84, wherein the step of decoding the subband audio codes comprises:

extracting a bit allocation table for the subband audio codes from the side information, in which the bit rate corresponding to each subband audio code is fixed over the subframe;

extracting a sequence of scale factors from the side information;

extracting a transient mode (TMODE) for each subband audio code that identifies the number of scale factors and their associated sub-subframe positions in the subband audio code; and

scaling the subband audio codes by their respective scale factors in accordance with their TMODEs.

88. The method of claim 84, wherein the step of decoding the subband audio codes comprises:

inverse adaptive differential pulse code

modulation (ADPCM) decoding the subband audio codes at the lower subband frequencies; and

inverse vector quantizing the subband audio codes at the higher subband frequencies.

89. The method of claim 88, further comprising:

extracting a joint frequency coding (JFC) index from the audio header for each audio channel, which indicates whether JFC is enabled, which subbands are joint frequency coded, and in which audio channel the subband audio code is located; and

directing the reconstructed subband signals for the designated subbands from the one designated audio channel to the other JFC channels.

90. The method of claim 84, wherein the block of high sampling rate audio codes is subdivided into a plurality of frequency subranges at successively higher break frequencies, said sampling rate audio codes being unpacked up to the largest break frequency that is less than or equal to one half the decoder sampling rate.

A MULTI-CHANNEL PREDICTIVE SUBBAND AUDIO CODER USING PSYCHOACOUSTIC ADAPTIVE BIT ALLOCATION IN FREQUENCY, TIME AND OVER THE MULTIPLE CHANNELS

ABSTRACT OF THE DISCLOSURE

A subband audio coder employs perfect/non-perfect reconstruction filters, predictive/non-predictive subband encoding, transient analysis, and psycho-acoustic/minimum mean-square-error (mmse) bit allocation over time, frequency and the multiple audio channels to encode/decode a data stream to generate high fidelity reconstructed audio. The audio coder windows the multi-channel audio signal such that the frame size, i.e. number of bytes, is constrained to lie in a desired range, and formats the encoded data so that the individual subframes can be played back as they are received thereby reducing latency. Furthermore, the audio coder processes the baseband portion (0-24kHz) of the audio bandwidth for sampling frequencies of 48kHz and higher with the same encoding/decoding algorithm so that audio coder architecture is future compatible.

Docket No. 262-24-086 PATENT

DECLARATION and POWER OF ATTORNEY - CIP

We, Stephen Malcolm Smyth, Michael Henry Smyth and William Paul Smith, declare: We are citizens of the United Kingdom, residing in Thousand Oaks, California, Agoura, California and Woodland Hills, California, respectively. We believe we are the original, first and joint inventors of the invention entitled "A MULTI-CHANNEL PREDICTIVE SUBBAND AUDIO CODER USING PHYCHOACOUSTIC ADAPTIVE BIT ALLOCATION IN FREQUENCY, TIME AND OVER THE MULTIPLE CHANNELS", described and claimed in the attached specification. We have reviewed and understand the contents of the specification, including the claims. We acknowledge a duty to disclose information of which we are aware that is material to the examination of this application in accordance with 37 C.F.R. 1.56(a).

We hereby claim the benefit under Title 35, United States Code, §120 of United States provisional patent application Serial No. 60/007,896, filed December 1, 1995 and, insofar as the subject matter of each of the claims of this application is not disclosed in that prior application in the manner provided by the first paragraph of Title 35, United States Code, §112, we acknowledge the duty to disclose all information known to us to be material to patentability as defined in 37 C.F.R. §1.56 which became available between the filing date of the prior application and the filing date of this continuation-in-part application.

We hereby appoint Richard S. Koppel (Reg. No. 26,475) and Eric A. Gifford (Reg. No. 33,501) whose address is:

KOPPEL & JACOBS
31255 Cedar Valley Drive, Suite 302
Westlake Village, California 91362-4031
Telephone: (818) 707-1911

our attorney and agent with full power of substitution and revocation, to prosecute this application and to transact all business in the Patent and Trademark Office connected with the application.

We declare further that all statements made herein of our own knowledge are true and that all statements made on informa-

tion and belief are believed to be true. These statements were made with the knowledge that willful false statements and the like so made are punishable by fine or imprisonment, or both, under 18 U.S.C. 1001, and that such willful false statements may jeopardize the validity of this application or any patent issuing from this application.

Date: 5/1, 1996

1. Stephen Malcolm Smyth

Post Office Address: 3622 Cambria Court
Thousand Oaks, California 91360 CA

Date: 5/1, 1996

2. Michael Henry Smyth

Post Office Address: 30654 Rigger Road
Agoura, California 91301 CA

Date: 5/1, 1996

3. William Paul Smith

Post Office Address: 21111 Mullholland Drive
Woodland Hills, California 91303 CA

J32\D086a dec

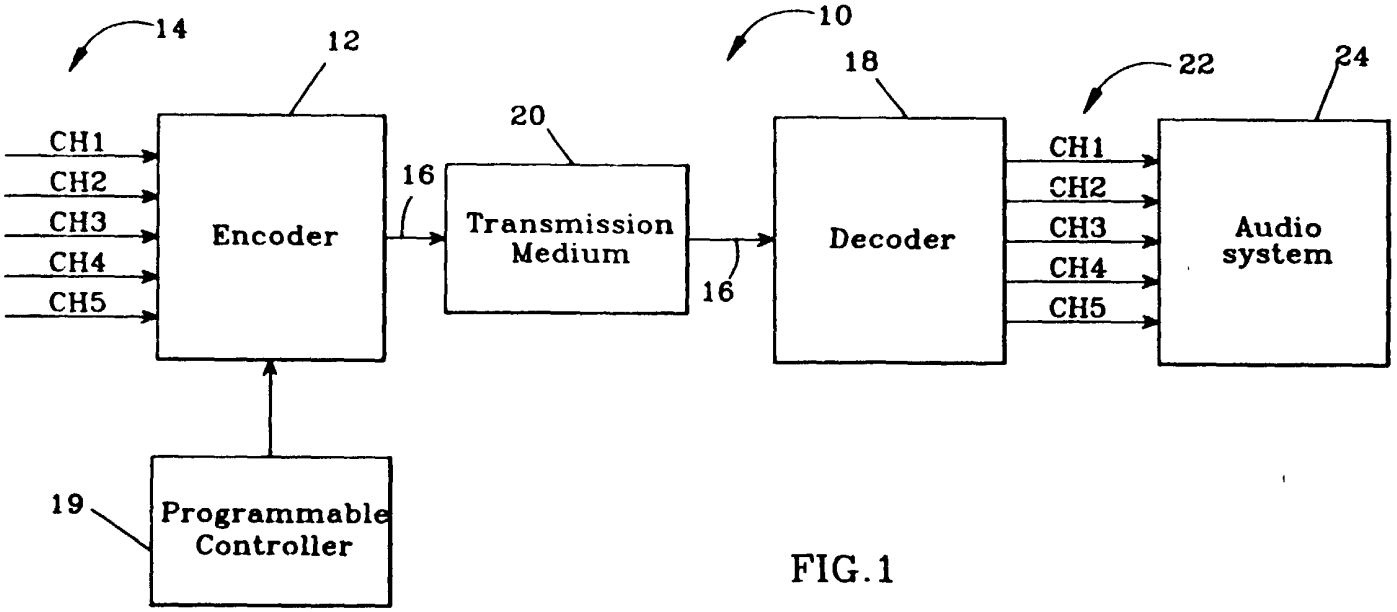

FIG.1

E/642554

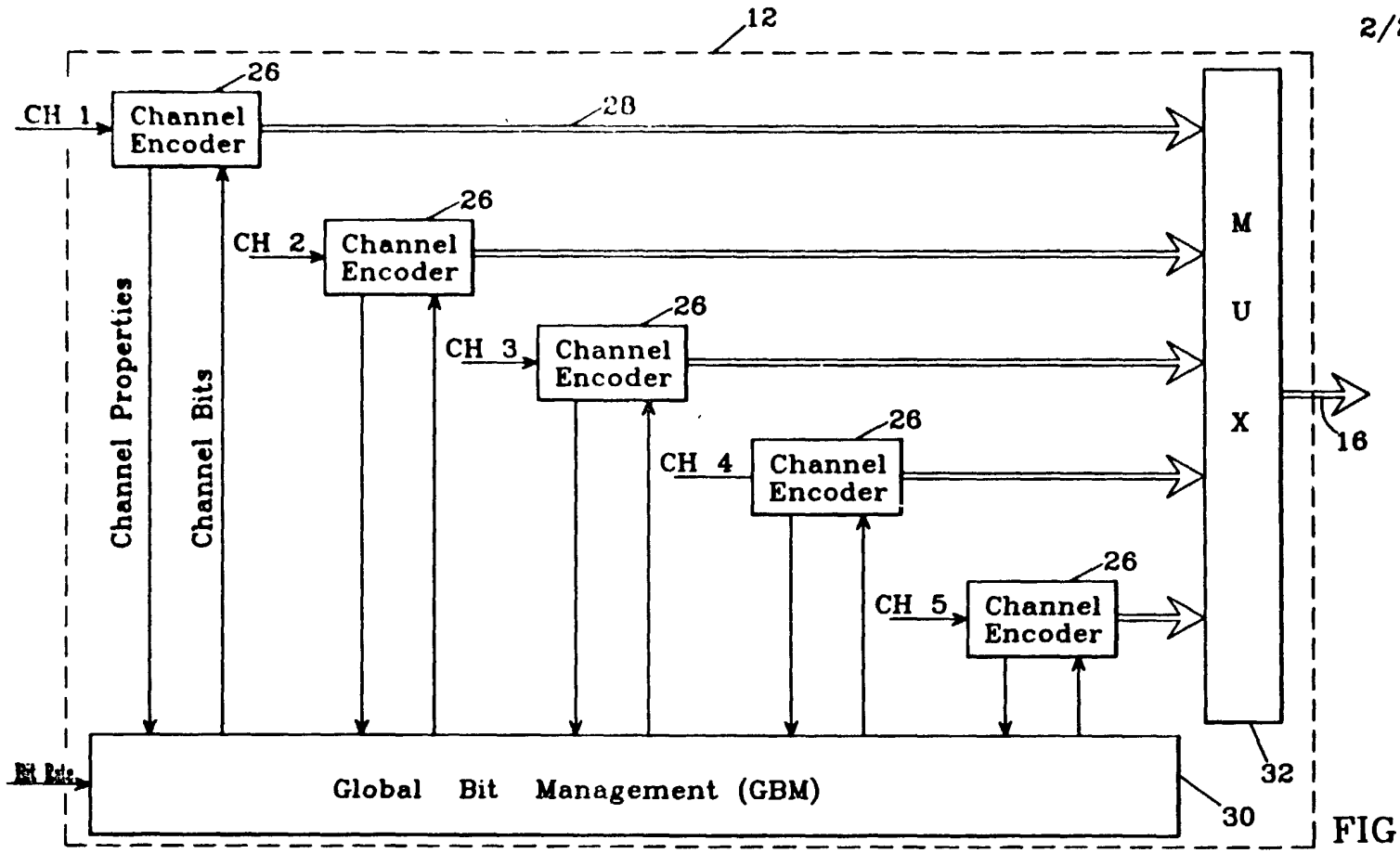
12
26
CH 1
Channel Encoder
28
CH 2
CH 3
CH 4
CH 5
Channel Properties
Channel Bits
M
U
X
16
32
Global Bit Management (GBM)
30

FIG.2

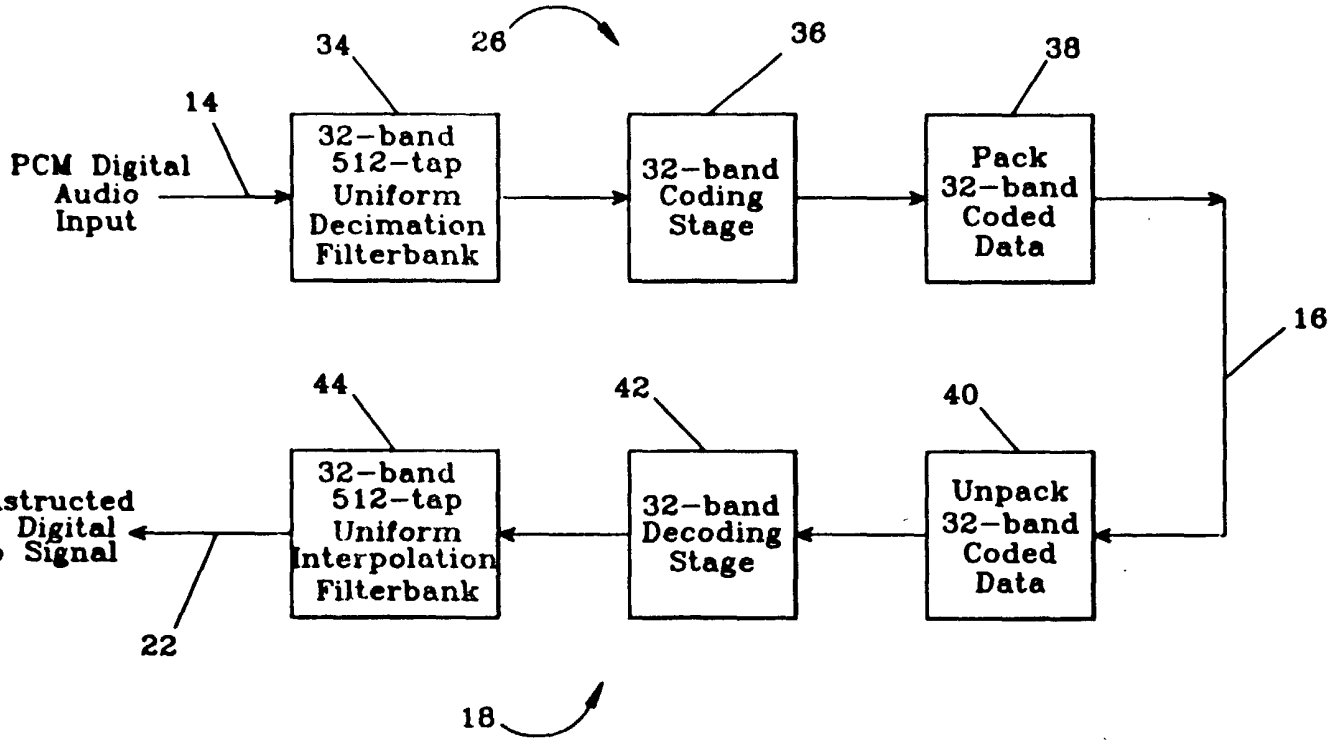

FIG.3

00/62254

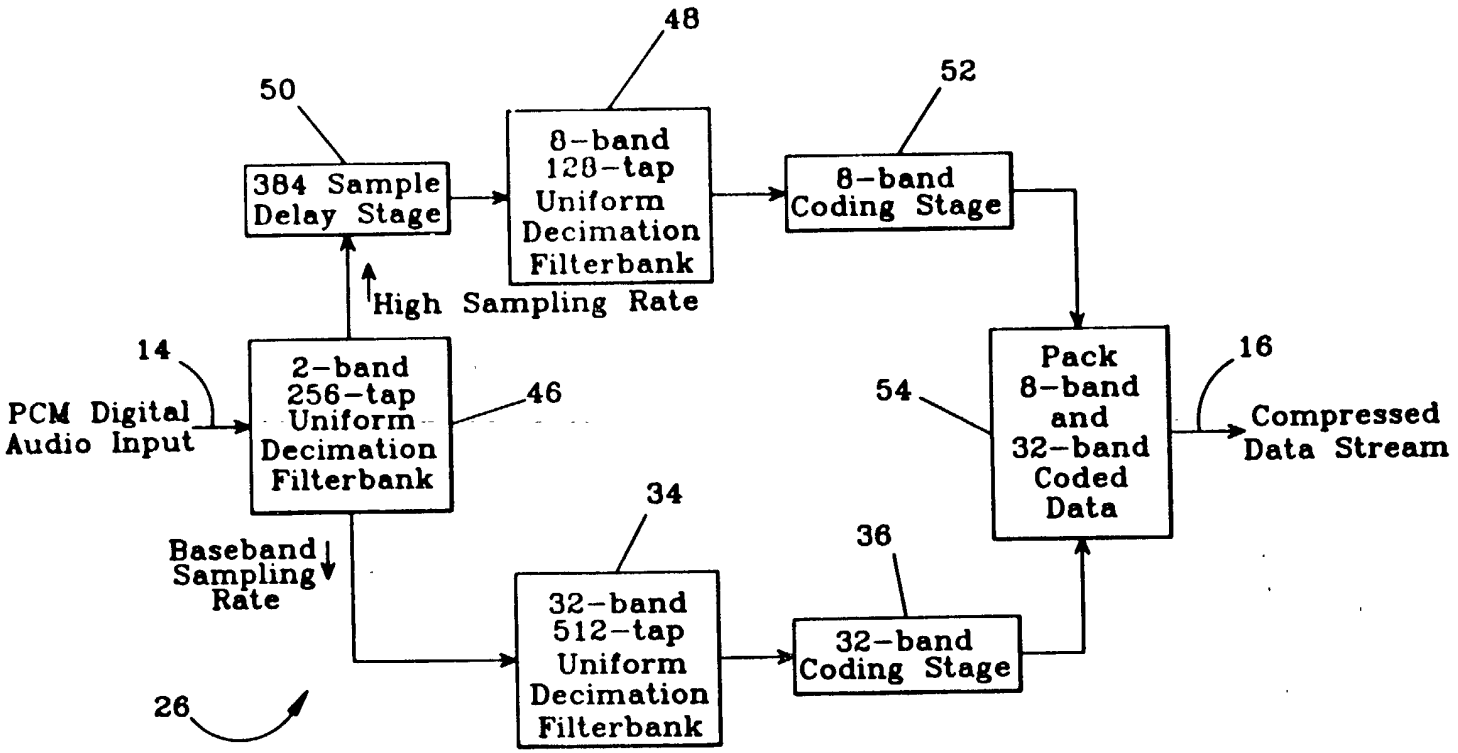

FIG.4a

03/642254

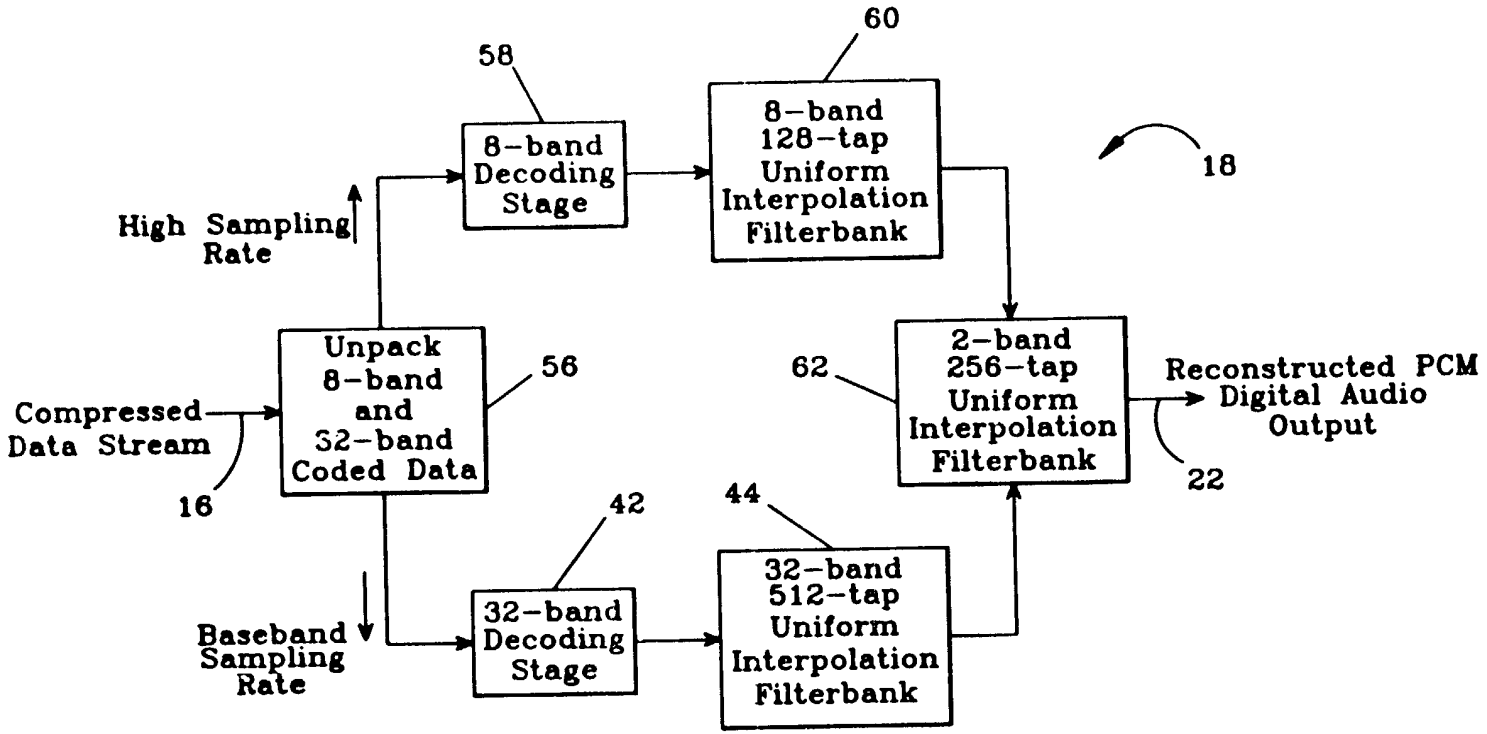

FIG.4b

08/642254

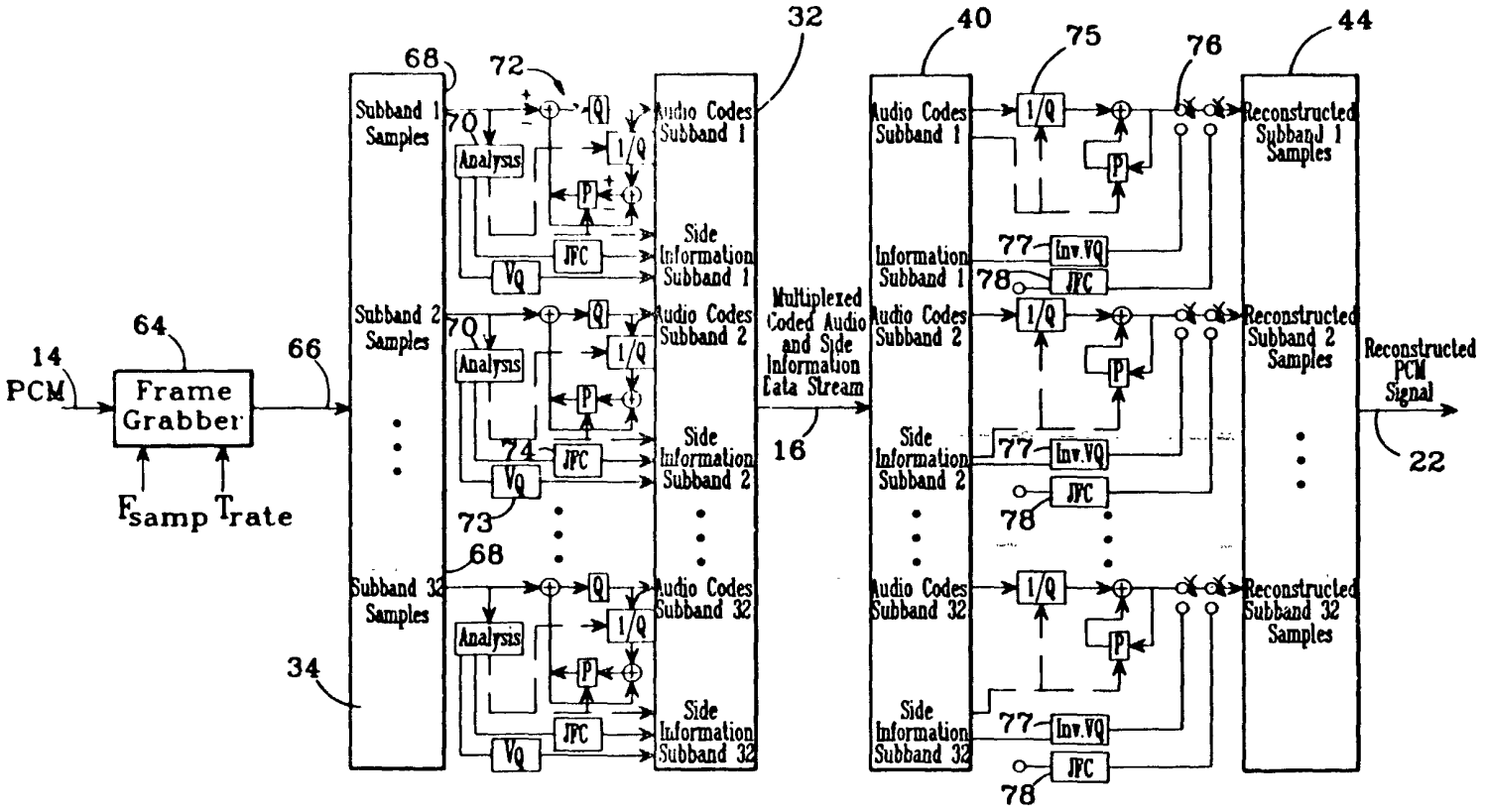

FIG.5

03/642254

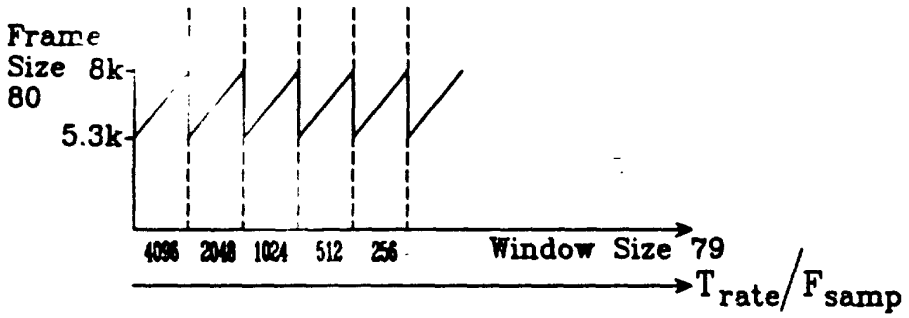

FIG.6

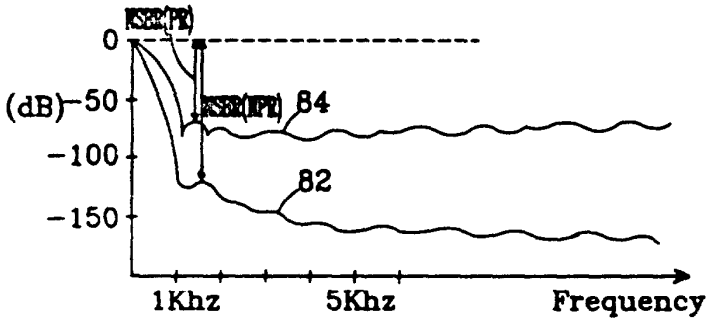

FIG.7

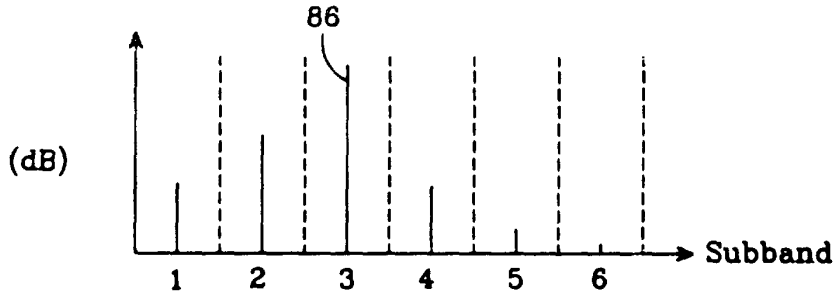

FIG.8

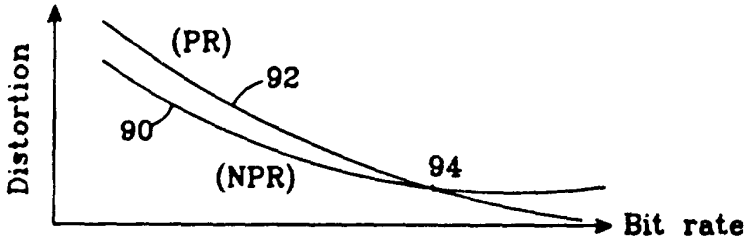

FIG.9

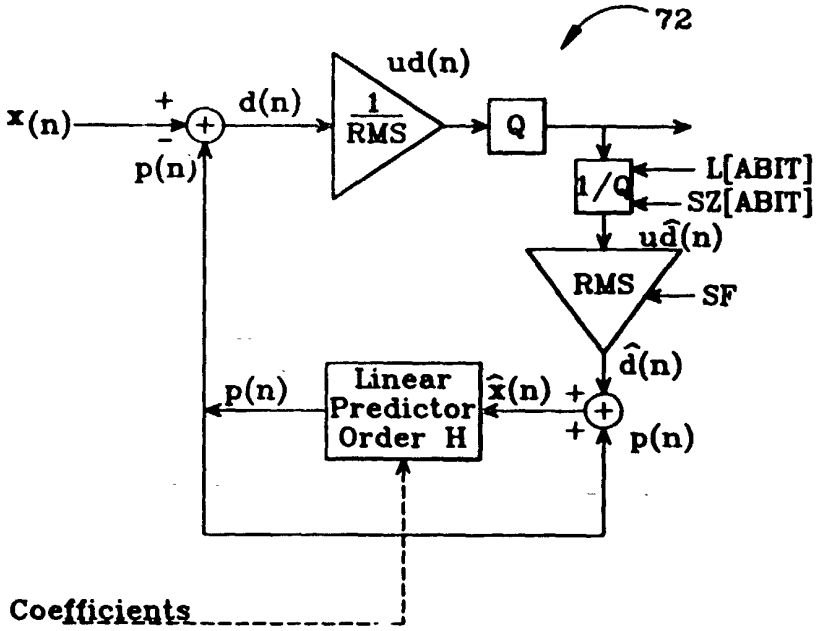
72
x(n)
+
-
p(n)
d(n)
ud(n)
1
RMS
Q
1/Q
L[ABIT]
SZ[ABIT]
ud(n)
RMS
SF
d(n)
p(n)
Linear
Predictor
Order H
x(n)
+
+
p(n)
Predictor Coefficients

FIG.10

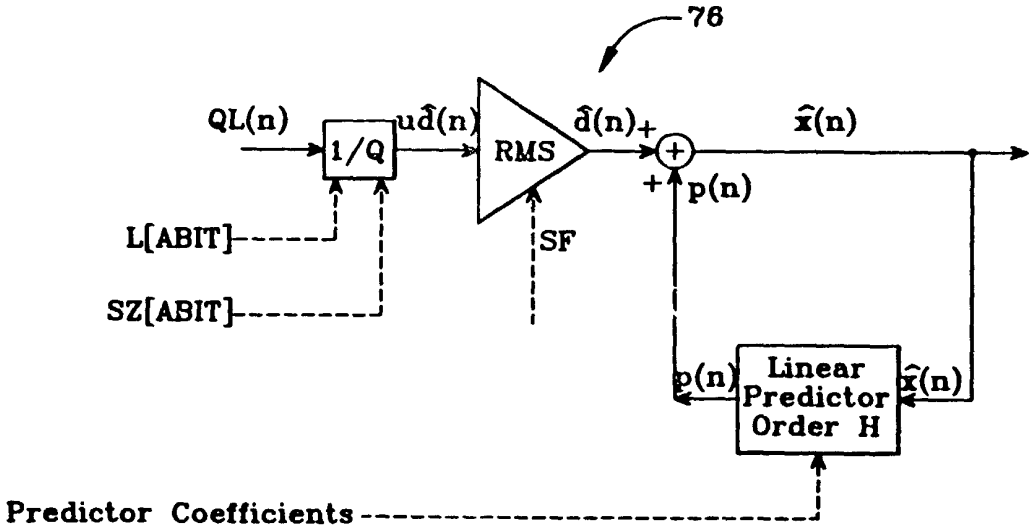

FIG. 11

08/642254

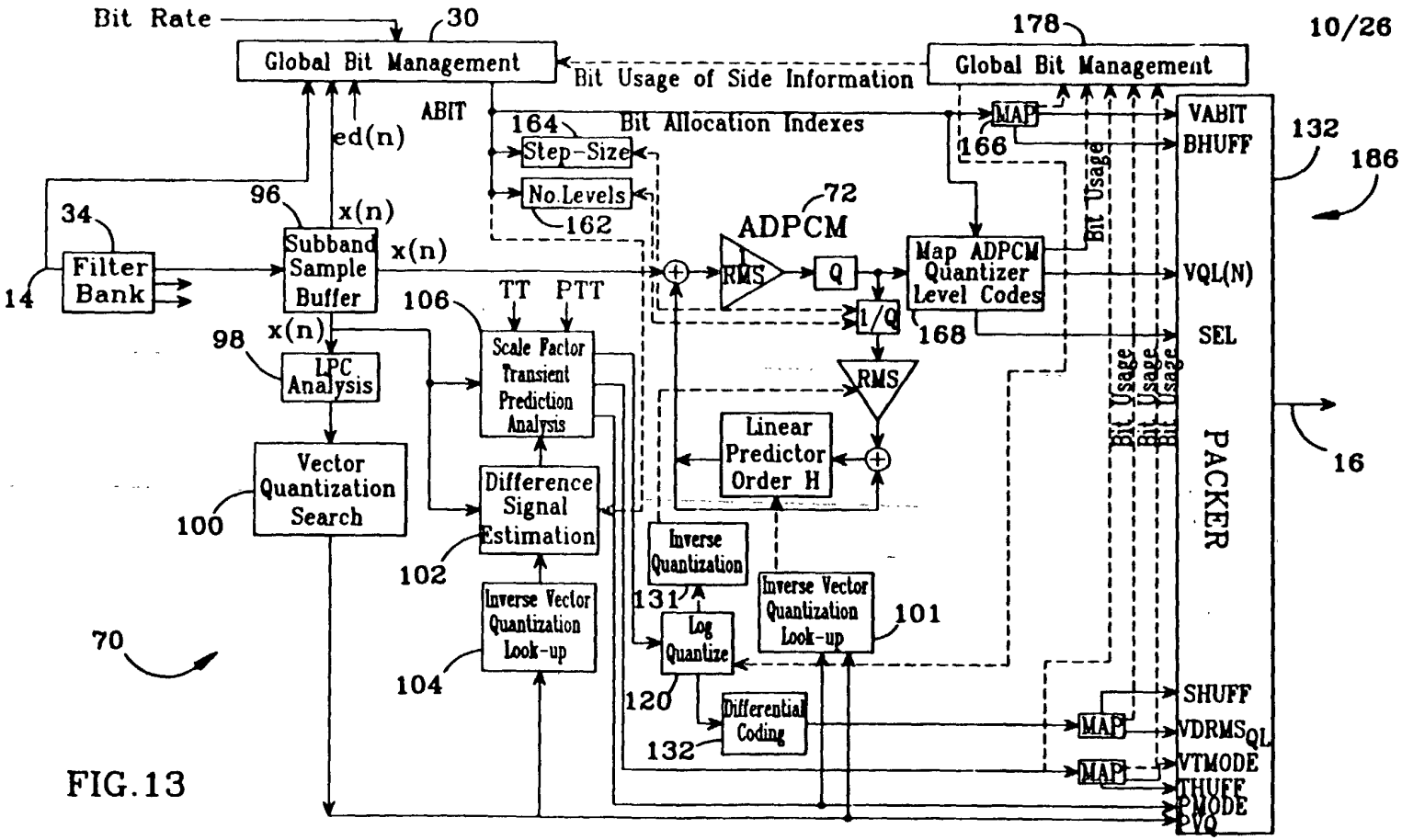

FIG.13

08/642,234

109

	Subframe Buffer			
TMODE	Sub-subframe 1	Sub-subframe 2	Sub-subframe 3	Sub-subframe 4
0				
1			X X	X X
2				X X
3				

108

FIG.14a

109

	Subframe Buffer			
TMODE	Sub-subframe 1	Sub-subframe 2	Sub-subframe 3	Sub-subframe 4
0	RMS 1 or Peak 1			
1	RMS 1 or Peak 1	RMS 2 or Peak 2		
2	RMS 1 or Peak 1		RMS 2 or Peak 2	
3	RMS 1 or Peak 1			RMS 2 or Peak 2

110

FIG.14b

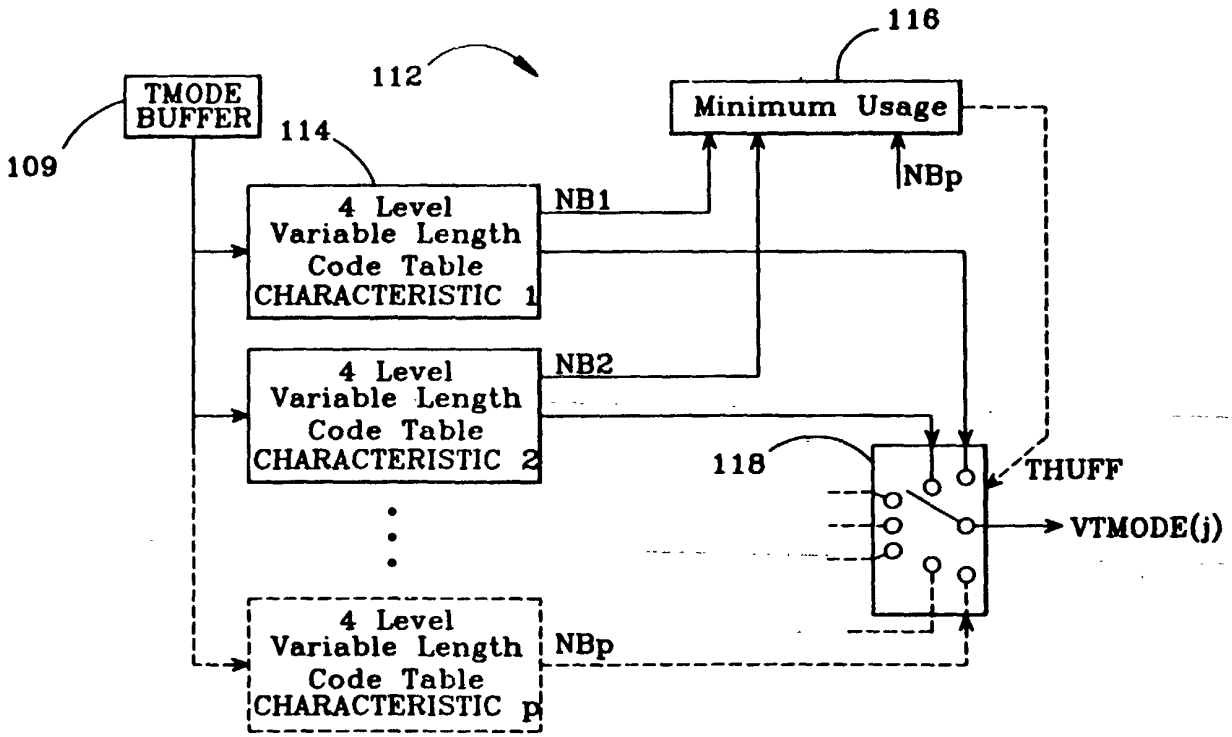

FIG.15

08/642254

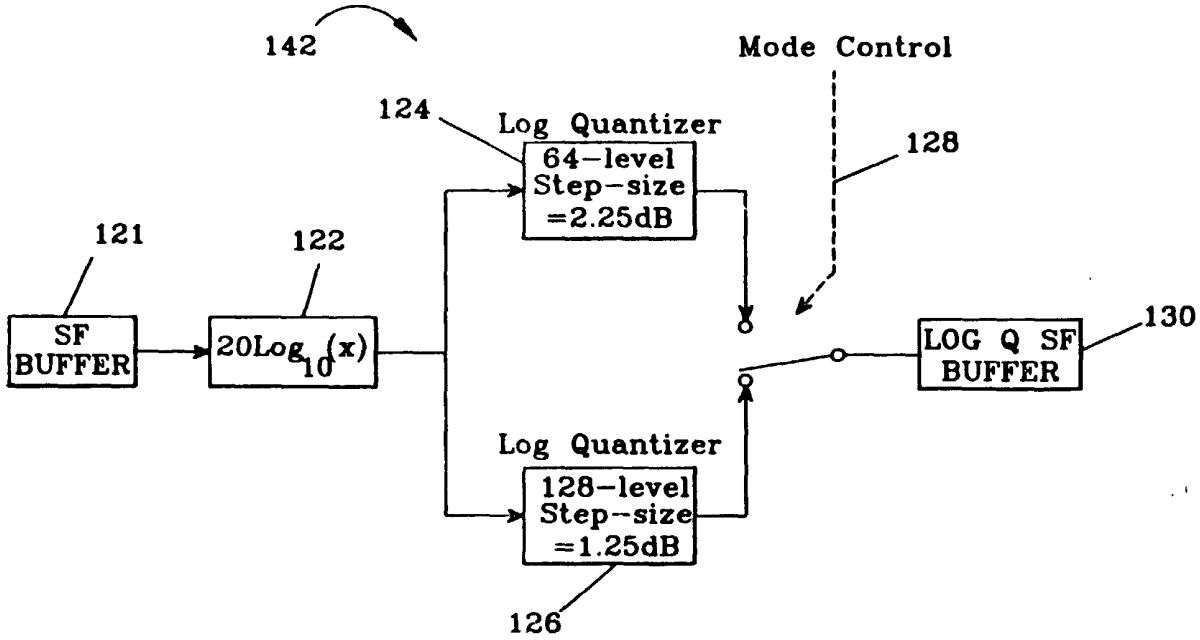

FIG.16

08/642254

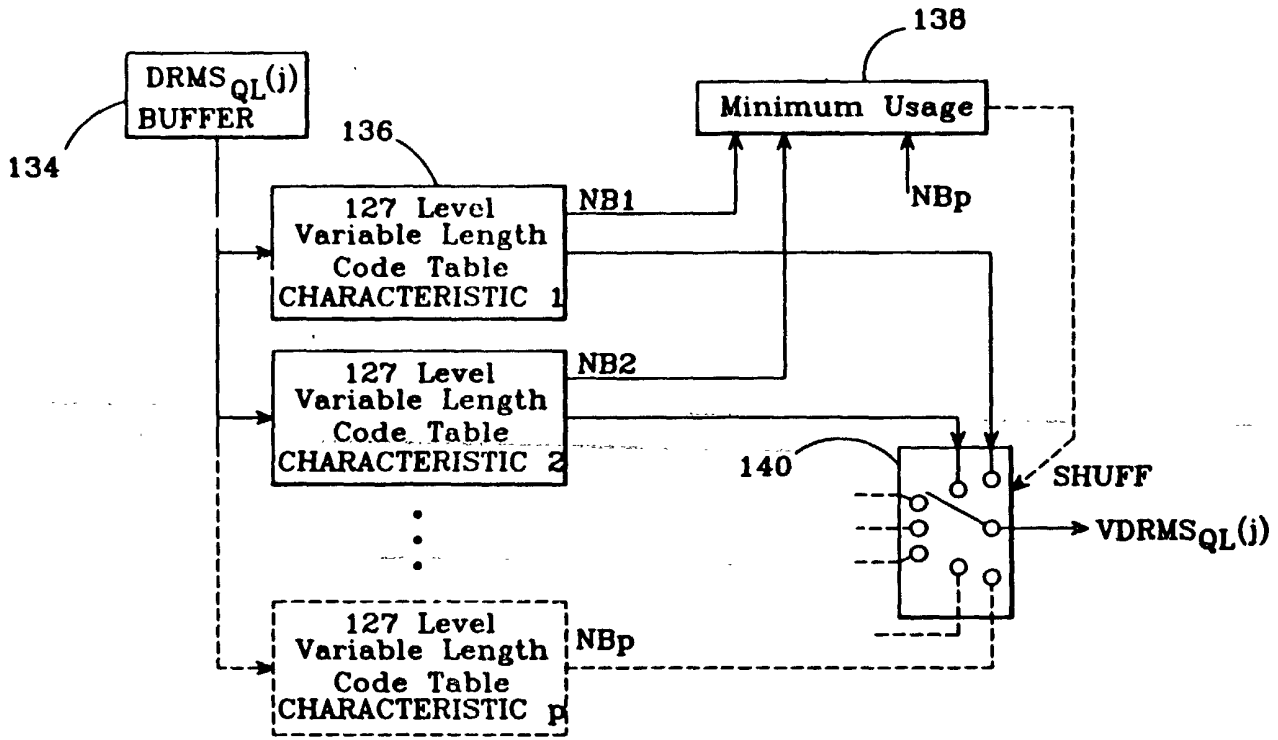

FIG.17

08/642254

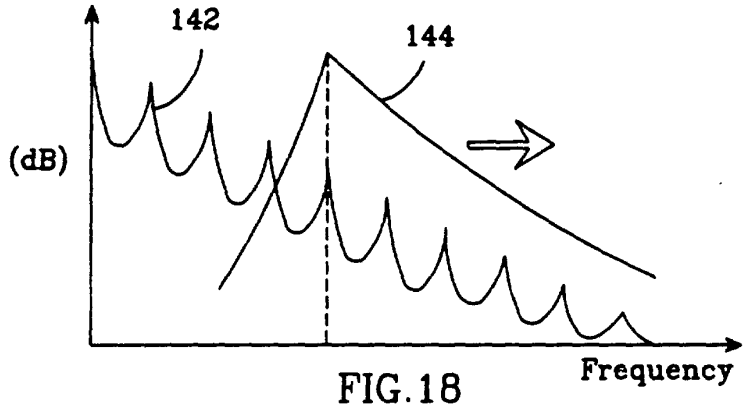

FIG.18

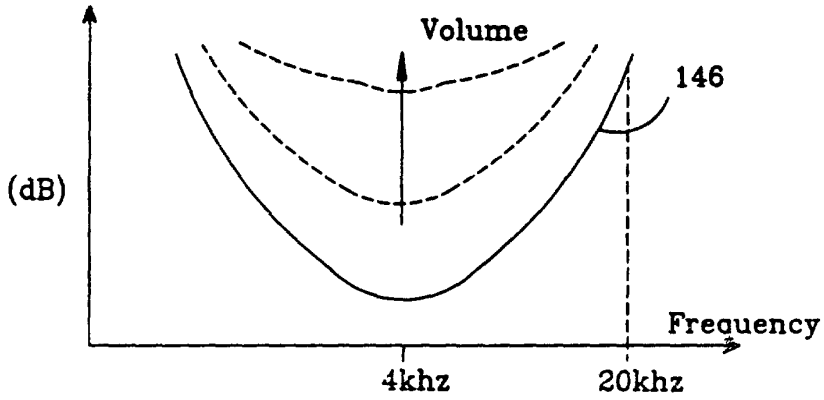

FIG.19

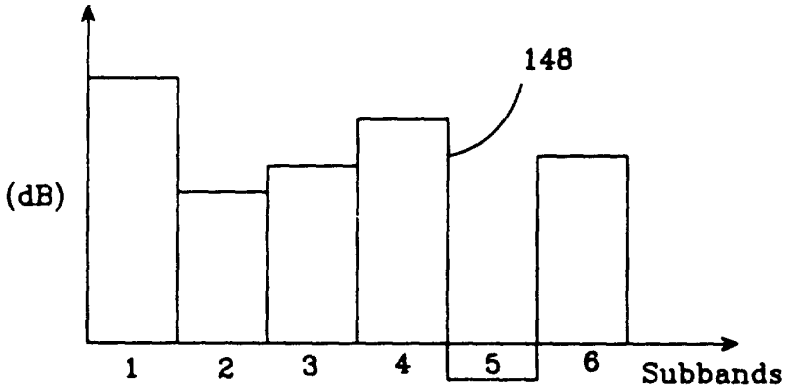

FIG.20

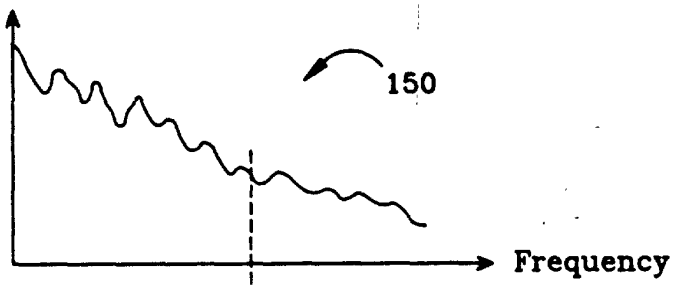

FIG,12a

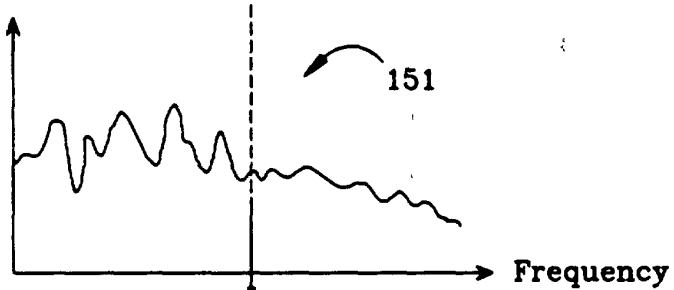

FIG.12b

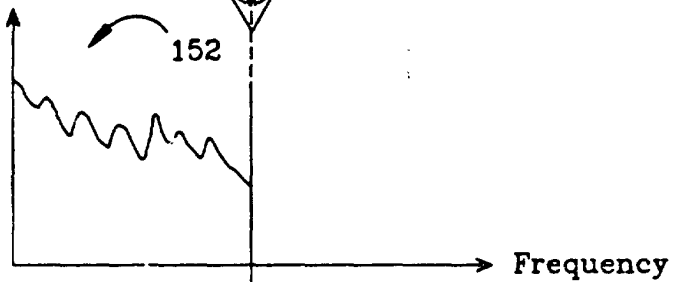

FIG.12c

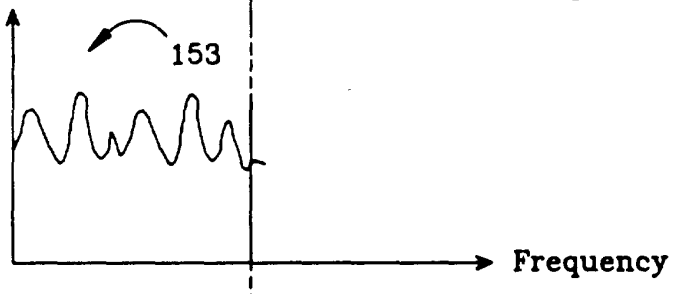

FIG.12d

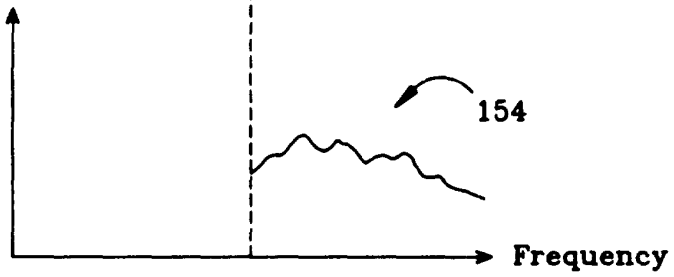

FIG.12e

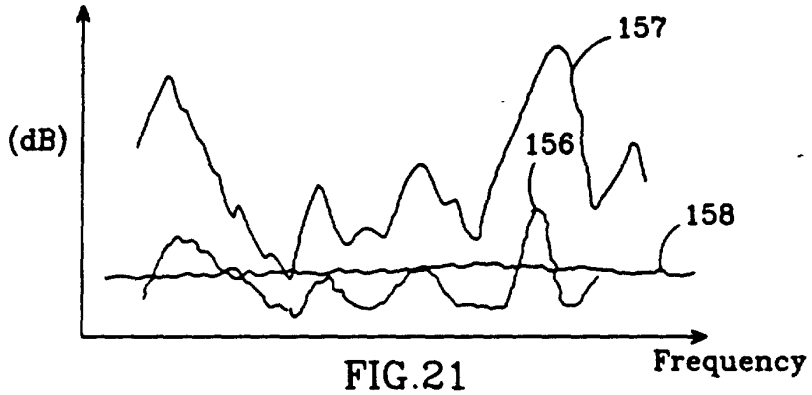

FIG.21

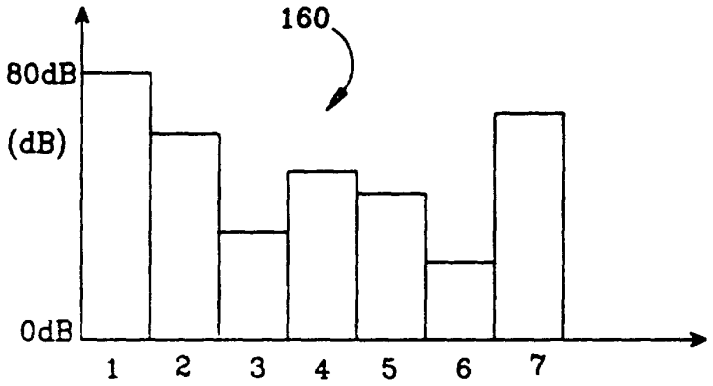

FIG.22a

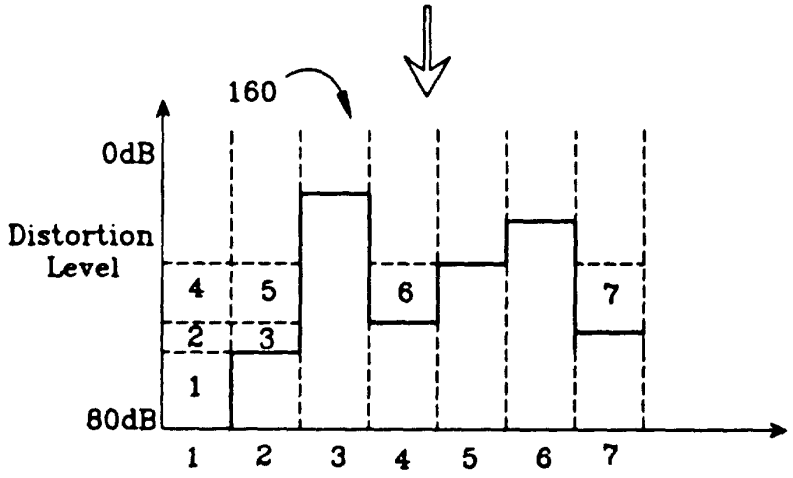

FIG.22b

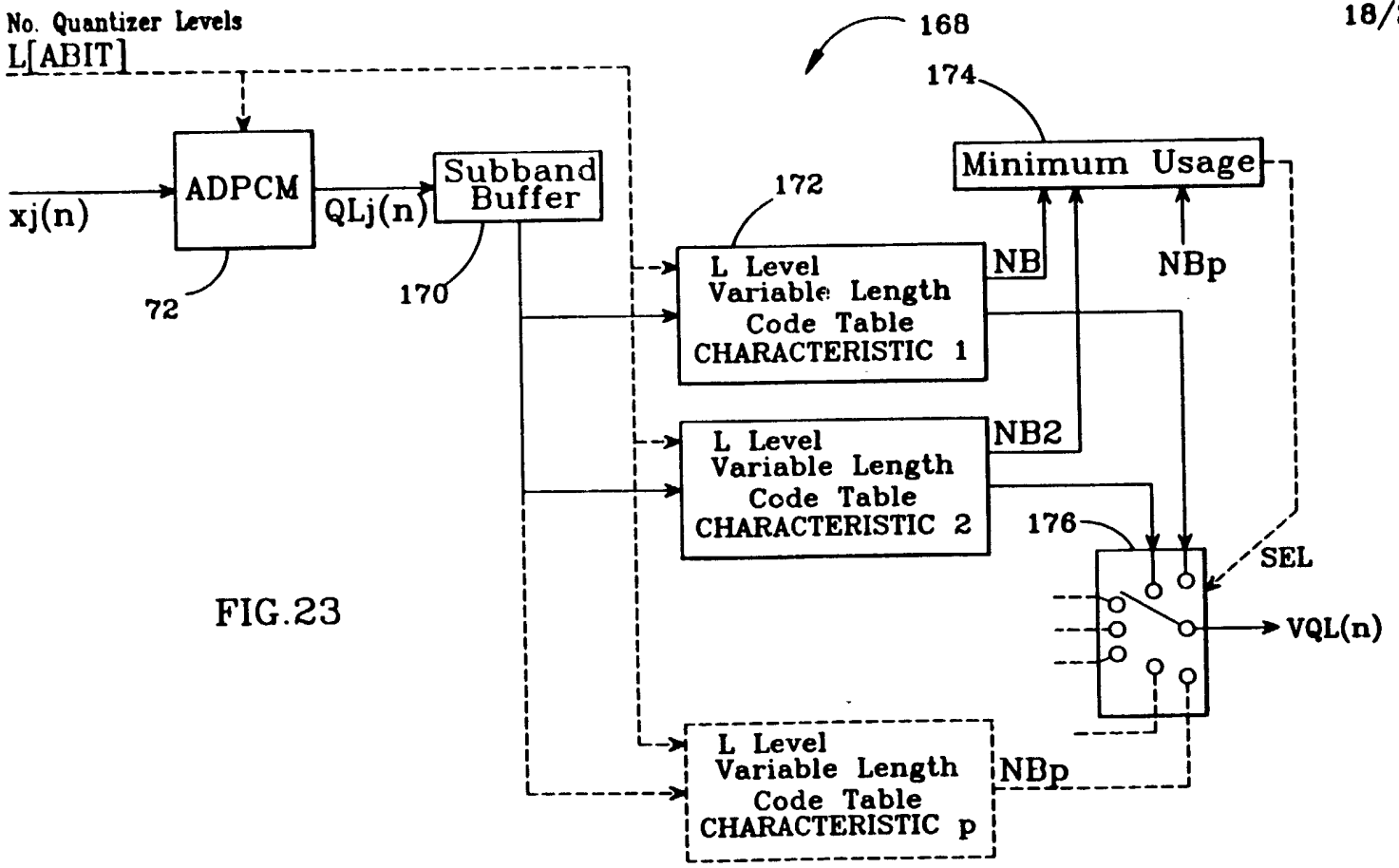

FIG.23

08/642254

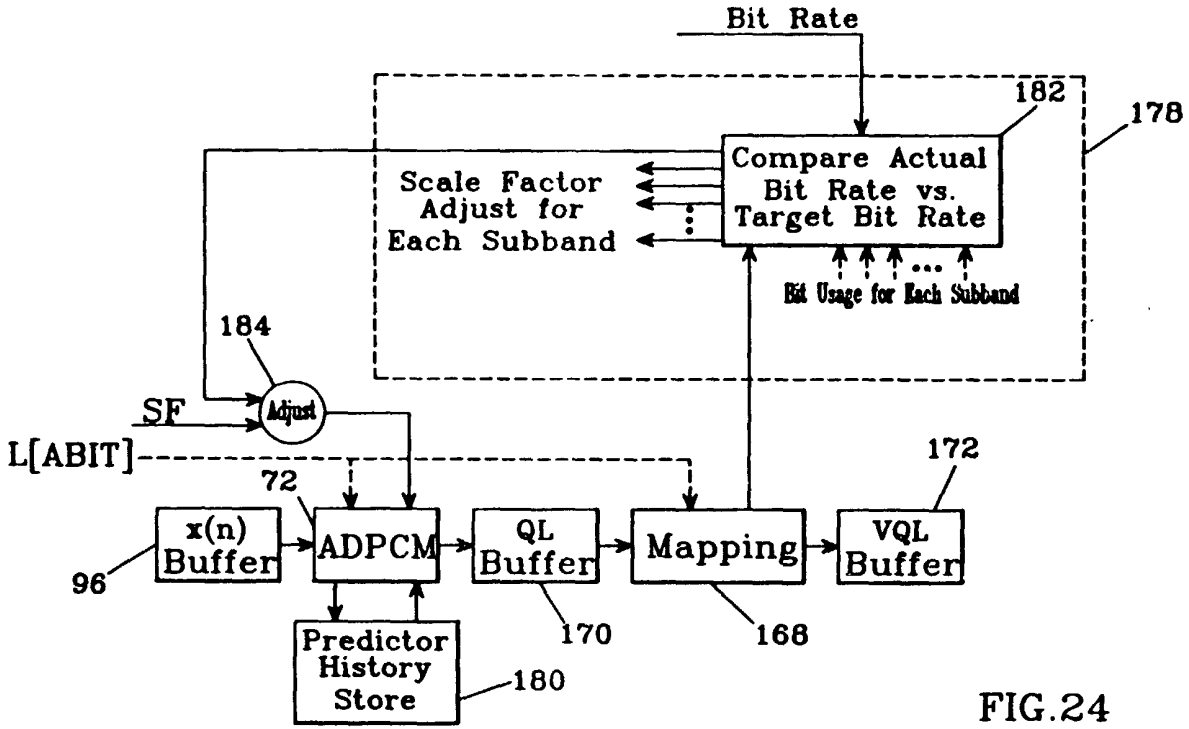

FIG.24

08/642254

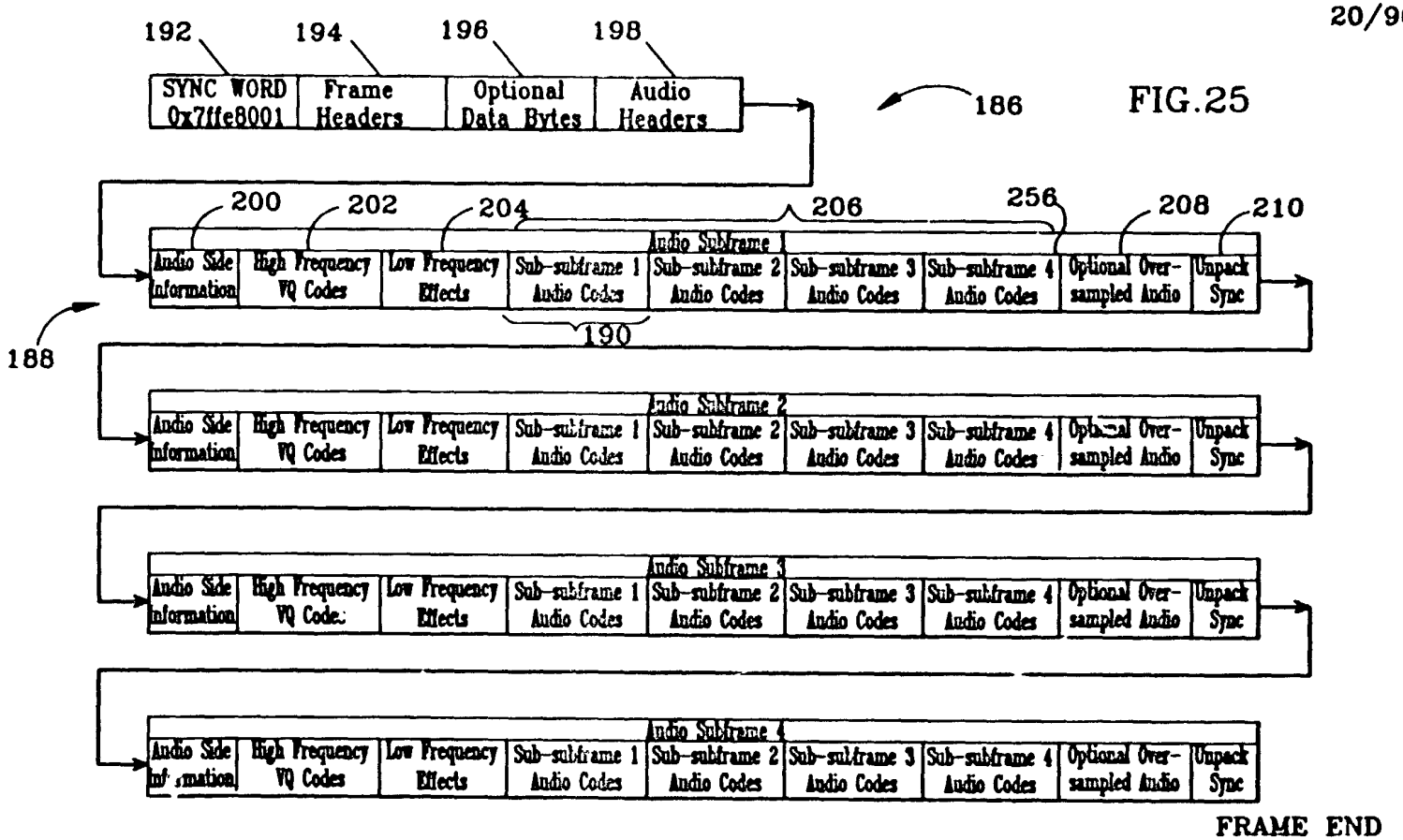

FIG.25

09/642254

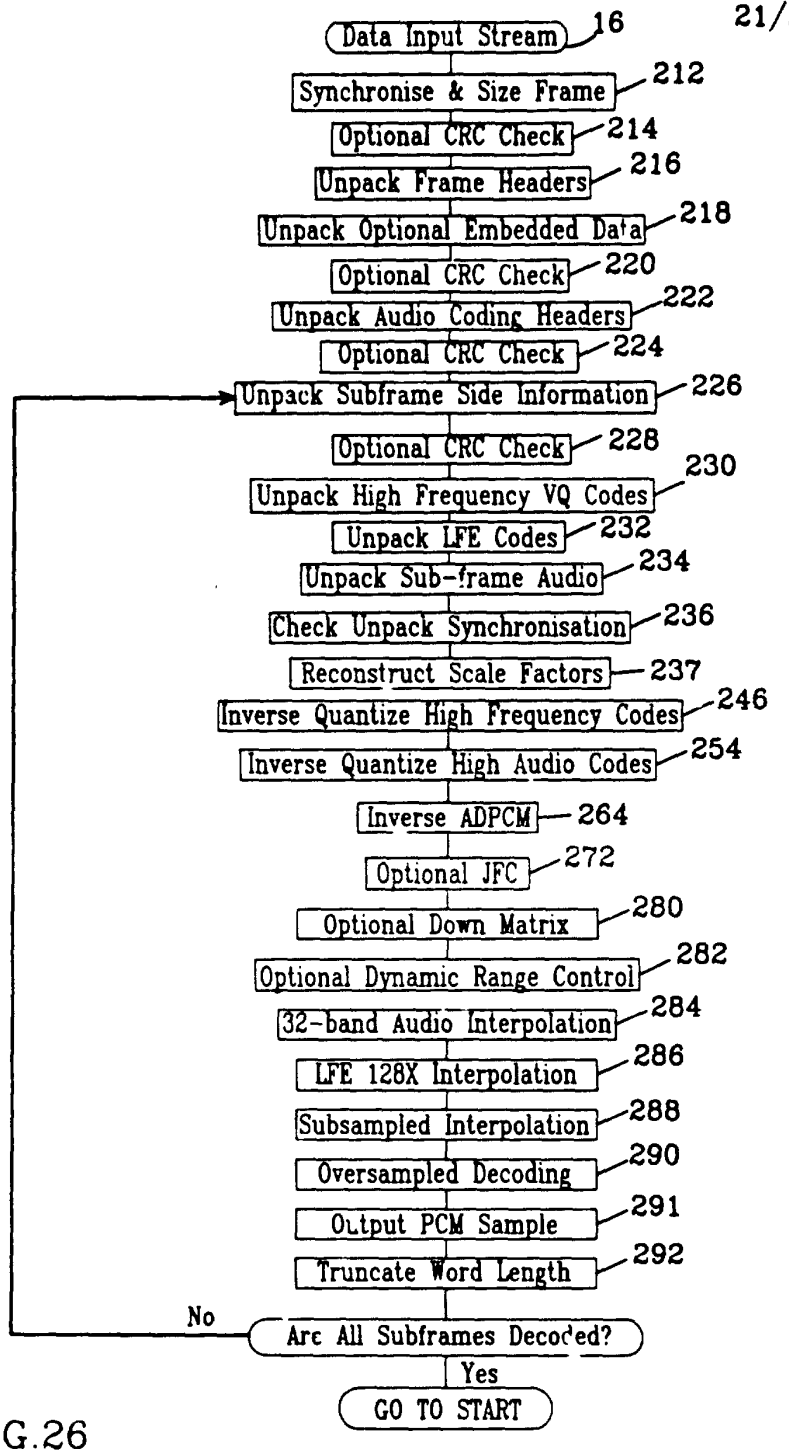
Data Input Stream
16
Synchronise & Size Frame
212
Optional CRC Check
214
Unpack Frame Headers
216
Unpack Optional Embedded Data
218
Optional CRC Check
220
Unpack Audio Coding Headers
222
Optional CRC Check
224
Unpack Subframe Side Information
226
Optional CRC Check
228
Unpack High Frequency VQ Codes
230
Unpack LFE Codes
232
Unpack Sub-frame Audio
234
Check Unpack Synchronisation
236
Reconstruct Scale Factors
237
Inverse Quantize High Frequency Codes
246
Inverse Quantize High Audio Codes
254
Inverse ADPCM
264
Optional JFC
272
Optional Down Matrix
280
Optional Dynamic Range Control
282
32-band Audio Interpolation
284
LFE 128X Interpolation
286
Subsampled Interpolation
288
Oversampled Decoding
290
Output PCM Sample
291
Truncate Word Length
292
No
Are All Subframes Decoded?
Yes
GO TO START

FIG.26

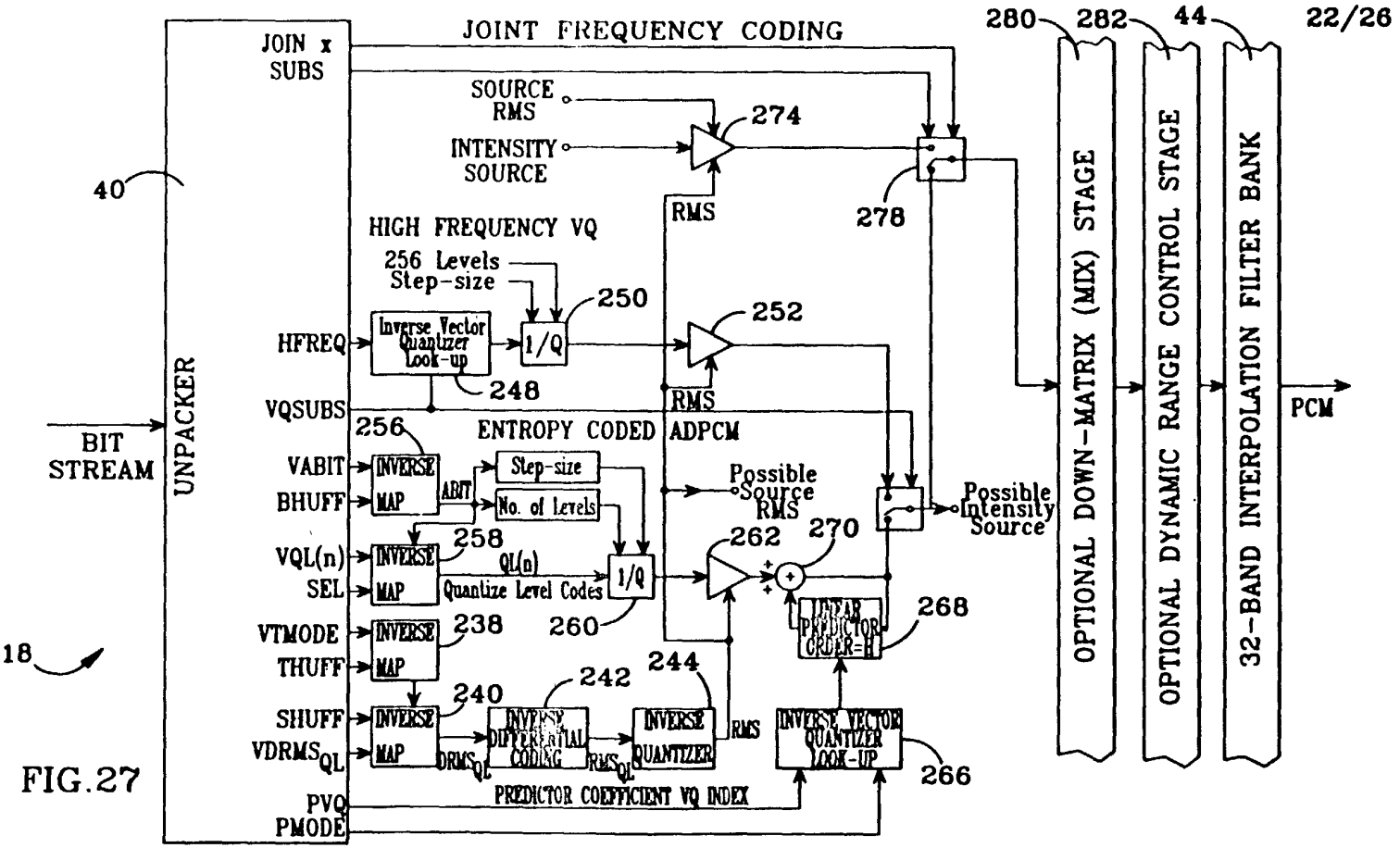
JOIN x SUBS
JOINT FREQUENCY CODING
SOURCE RMS
INTENSITY SOURCE
274
RMS
278
40
HIGH FREQUENCY VQ
256 Levels Step-size
250
252
HFREQ
Inverse Vector Quantizer Look-up
1/Q
248
RMS
VQSUBS
256
ENTROPY CODED ADPCM
BIT STREAM
UNPACKER
VABIT
BHUFF
INVERSE MAP
ABIT
Step-size
No. of Levels
Possible Source RMS
Possible Intensity Source
VQL(n)
SEL
258
QL(n)
Quantize Level Codes
262
270
260
VTMODE
THUFF
238
LINEAR PREDICTOR ORDER=H
268
244
242
240
SHUFF
VDRMS QL
INVERSE DIFFERENTIAL CODING
INVERSE QUANTIZER
RMS
INVERSE VECTOR QUANTIZER LOOK-UP
266
PREDICTOR COEFFICIENT VQ INDEX
PVQ
PMODE
18
FIG.27
280
282
44
22/26
OPTIONAL DOWN-MATRIX (MIX) STAGE
OPTIONAL DYNAMIC RANGE CONTROL STAGE
32-BAND INTERPOLATION FILTER BANK
PCM
92/012254

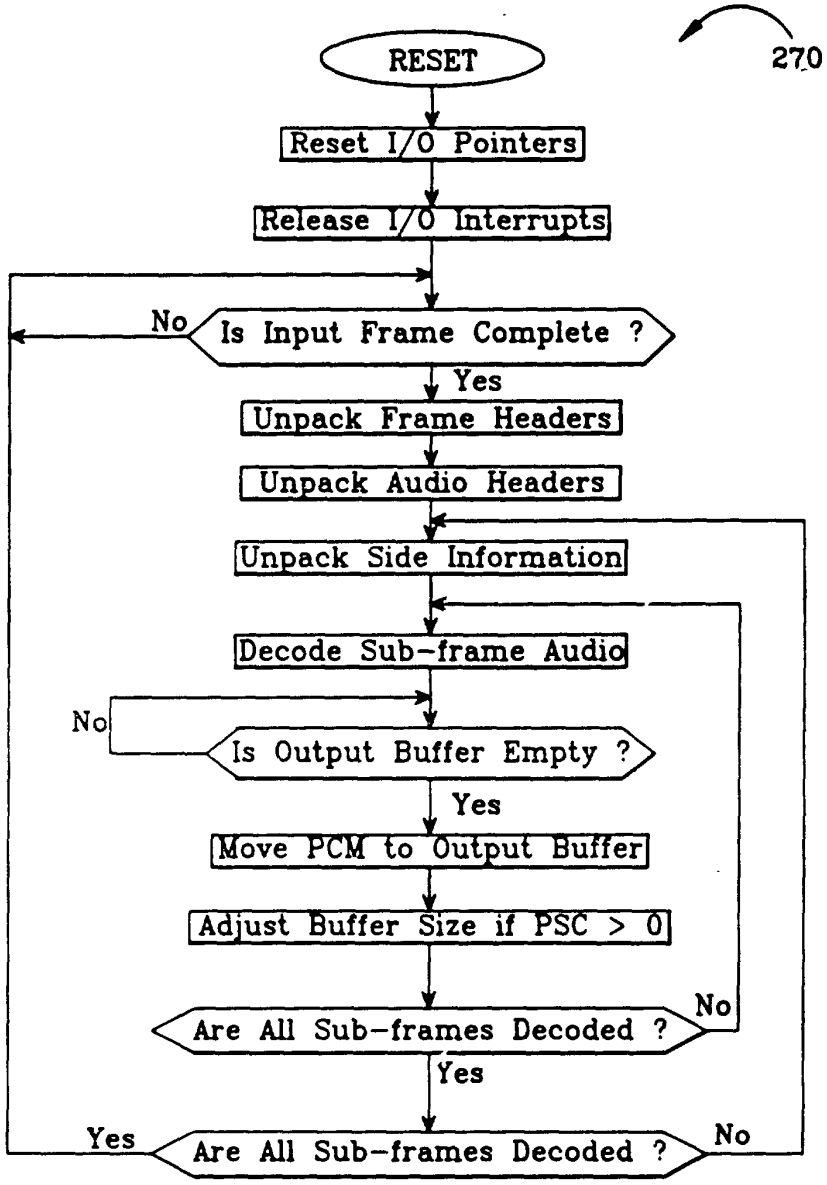
270
RESET
Reset I/O Pointers
Release I/O Interrupts
No
Is Input Frame Complete ?
Yes
Unpack Frame Headers
Unpack Audio Headers
Unpack Side Information
Decode Sub-frame Audio
No
Is Output Buffer Empty ?
Yes
Move PCM to Output Buffer
Adjust Buffer Size if PSC > 0
No
Are All Sub-frames Decoded ?
Yes
Yes
Are All Sub-frames Decoded ?
No

FIG.28

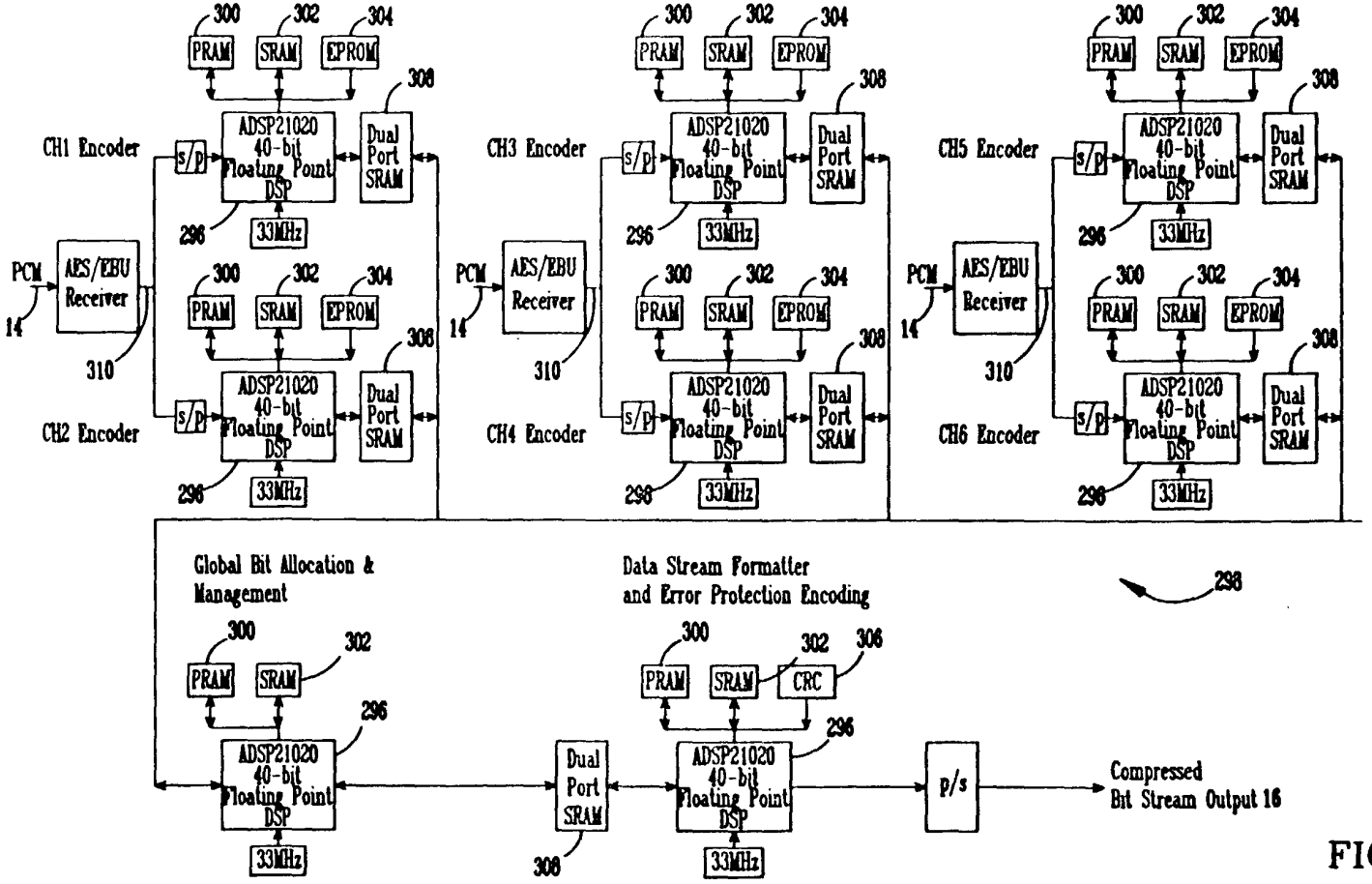

FIG.29

08/642254

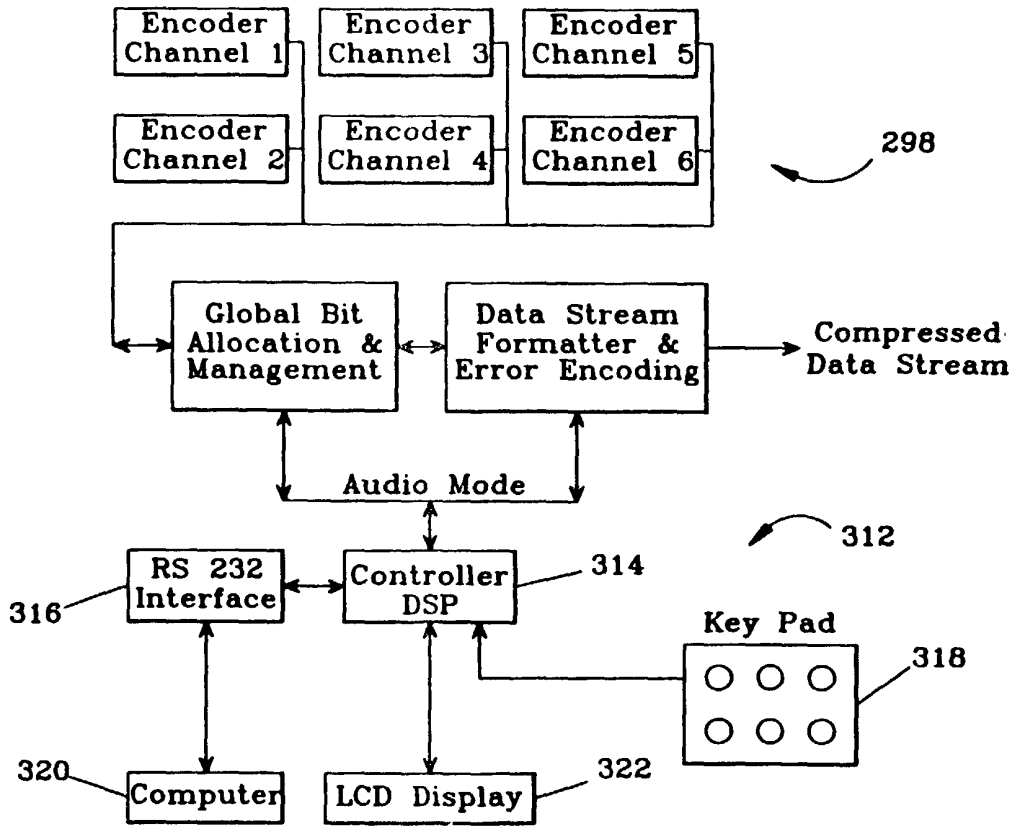
Encoder Channel 1
Encoder Channel 3
Encoder Channel 5
Encoder Channel 2
Encoder Channel 4
Encoder Channel 6
298
Global Bit Allocation & Management
Data Stream Formatter & Error Encoding
Compressed Data Stream
Audio Mode
312
RS 232 Interface
316
Controller DSP
314
Key Pad
318
320
Computer
LCD Display
322

FIG.30

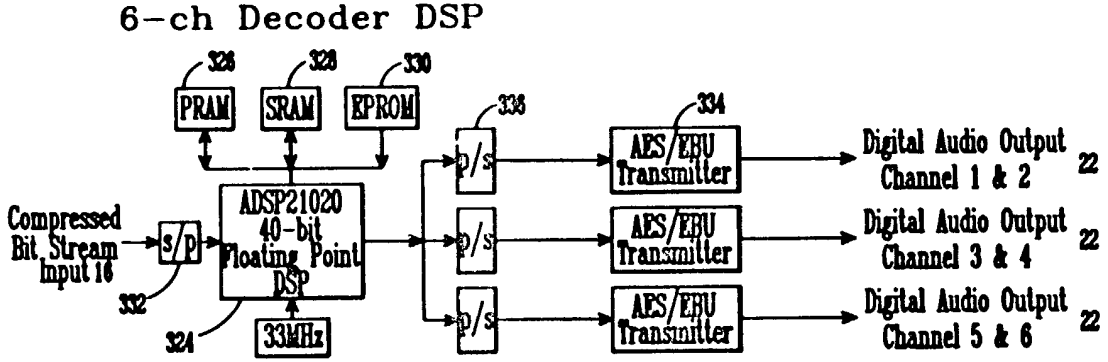

FIG.31

08/042254

PCT/US 96/18764

BAR CODE LABEL

U.S. PATENT APPLICATION

SERIAL NUMBER	FILING DATE	CLASS	GROUP ART UNIT
60/007,896 PROVISIONAL	12/01/95		

APPLICANT

MICHAEL H. SMYTH, AGOURA, CA; STEPHEN M. SMYTH, AGOURA, CA; PAUL W. SMITH, AGOURA, CA.

RECD 09 JAN 1997
WIPO PCT

CONTINUING DATA********
VERIFIED

_____

FOREIGN/PCT APPLICATIONS********
VERIFIED

_____

PRIORITY DOCUMENT

FOREIGN FILING LICENSE GRANTED 04/09/96

STATE OR COUNTRY	SHEETS DRAWING	TOTAL CLAIMS	INDEPENDENT CLAIMS	FILING FEE RECEIVED	ATTORNEY DOCKET NO.
CA	39			$200.00	262-24-086

ADDRESS

KOPPEL & JACOBS
SUITE 302
31255 CEDAR VALLEY DRIVE
WESTLAKE VILLAGE CA 91362-4031

TITLE

ADAPTIVE BIT-ALLOCATION IN TIME AND/OR FREQUENCY AND/OR CHANNELS WITHIN A MULTI-CHANNEL/MULTI-BAND DIFFERENTIAL AUDIO CODING SCHEME

This is to certify that annexed hereto is a true copy from the records of the United States Patent and Trademark Office of the application which is identified above.

By authority of the
COMMISSIONER OF PATENTS AND TRADEMARKS

Date DEC 9 1996 Certifying Officer

PATENT APPLICATION SERIAL NO._____

U.S. DEPARTMENT OF COMMERCE
PATENT AND TRADEMARK OFFICE
FEE RECORD SHEET

270 MM 01/02/96 60007896 1 114 150.00 CK 262-24-086

PTO-1556
(5/87)

IT 3



PROVISIONAL APPLICATION

OF

MICHAEL H. SMYTH
Agoura, California

STEPHEN M. SMYTH
Agoura, California

PAUL W. SMITH
Agoura, California

FOR

UNITED STATES LETTERS PATENT

ON

ADAPTIVE BIT-ALLOCATION IN TIME AND/OR FREQUENCY AND/OR CHANNELS WITHIN A MULTI-CHANNEL/MULTI-BAND DIFFERENTIAL AUDIO CODING SCHEME

Docket No. 262-24-086

KOPPEL & JACOBS
Richard S. Koppel Reg. No. 26,475
Eric A. Gifford Reg. No. 33,501

ASSIGNED TO

Digital Theater Systems, L.P.

KOPPEL & JACOBS

AN ASSOCIATION OF PROFESSIONAL LAW CORPORATIONS

RICHARD S. KOPPEL, P.C.
MARVIN E. JACOBS, P.C.
JAMES W. WIEGAND*
ERIC A. GIFFORD, PhD*
RENÉ A. VAZQUEZ*
JOSEPH COMPTON*
STEVEN C. PATRICK**

**PATENT AGENT
*ADMITTED IN MASS
**PATENT LAW CLERK

31255 CEDAR VALLEY DRIVE, SUITE 302
WESTLAKE VILLAGE, CALIFORNIA 91362-4031
PHONE (818) 707-1911
FAX (818) 889-7726

VENTURA
(805) 648-5194

PATENTS
TRADEMARKS
COPYRIGHTS

November 29, 1995

Commissioner of Patents and Trademarks
Box Patent Application
Washington, D.C. 20231

Re: ADAPTIVE BIT-ALLOCATION IN TIME AND/OR FREQUENCY AND/OR CHANNELS WITHIN A MULTI-CHANNEL/MULTI-BAND DIFFERENTIAL AUDIO CODING SCHEME
Docket No. 262-24-086

Sir:

Transmitted herewith for filing under 35 U.S.C. 111 and 37 CFR 1.53 is the PROVISIONAL patent application of Michael H. Smyth, Stephen M. Smyth and Paul W. Smith entitled ADAPTIVE BIT-ALLOCATION IN TIME AND/OR FREQUENCY AND/OR CHANNELS WITHIN A MULTI-CHANNEL/MULTI-BAND DIFFERENTIAL AUDIO CODING SCHEME.

Enclosed are:
122 pages of written description and abstract, 154 sheets of tables and drawings, and a cover sheet.

The filing fees have been calculated as shown below:
Basic Fee for a provisional application $150.00

Our Check No. 9246 for $150.00 to cover the provisional filing fee is enclosed. We authorize the Commissioner to charge (1) payment of any additional filing fees required under 37 CFR §1.16, (2) payment of any patent application processing fees under 37 CFR §1.17 associated with this communication, or (3) payment of any fees that occur during the pendency of this application (and to credit any overpayment) to Deposit Account No. 11-1580. We enclose a duplicate copy of this sheet.

Very truly yours,
KOPPEL & JACOBS

Eric A. Gifford
Reg. No. 33,501

Enclosures
DTS086 trs

PROVISIONAL APPLICATION

OF

MICHAEL H. SMYTH

STEPHEN M. SMYTH

PAUL W. SMITH

FOR

UNITED STATES LETTERS PATENT

ON

ADAPTIVE BIT-ALLOCATION IN TIME AND/OR FREQUENCY AND/OR CHANNELS WITHIN A MULTI-CHANNEL/MULTI-BAND DIFFERENTIAL AUDIO CODING SCHEME

Docket No. 262-24-086

KOPPEL & JACOBS
Richard S. Koppel Reg. No. 26,475
Eric A. Gifford Reg. No. 33,501

ASSIGNED TO

Digital Theater Systems, L.P.

I hereby certify that on **November 29, 1995**, which is also the date I am signing this declaration, this application is being deposited with the United States Postal Service "Express Mail Post Office to Addressee" service under 37 C.F.R. §1.10 addressed to the Commissioner of Patents and Trademarks, Washington, D.C. 20231. The "Express Mail" marking label number is TB884922346.

Jeanette E. Casserly

Jeanette E. Casserly

50 - 127 A/N

Docket No. 262-24-086 PATENT



IN THE UNITED STATES PATENT AND TRADEMARK OFFICE

Applicant: DIGITAL THEATER SYSTEMS, L.P.

Provisional Application No. 60/007,896

Receipt Date: December 1, 1995

Title: ADAPTIVE BIT-ALLOCATION IN TIME AND/OR FREQUENCY AND/OR CHANNELS WITHIN A MULTI-CHANNEL/MULTI-BAND DIFFERETNTIAL AUDIO CODING SCHEME

Hon. Commissioner of Patents and Trademarks
Box Provisional Patent Application
ATTN: Office of National Application Review
Washington, D.C. 20231

SUBMISSION OF MISSING PARTS OF PROVISIONAL APPLICATION

Sir:

The above provisional patent application was filed December 1, 1995, with a cover sheet omitting the city and state of the residence of each inventor. Enclosed is a cover sheet which has been amended to correct these defects.

Also enclosed is a check for $50 to cover the surcharge fee for a large entity for the submission of the missing parts.

I hereby certify that on **January 12, 1996**, which is also the date I am signing this declaration, this application is being deposited with the United States Postal Service "Express Mail Post Office to Addressee" service under 37 C.F.R. §1.10 addressed to the Commissioner of Patents and Trademarks, Washington, D.C. 20231. The "Express Mail" marking label number is TB884922720.

Jeanette E. Casserly
Jeanette E. Casserly

The Commissioner is hereby authorized to charge any additional fees which may be required while this application is pending in the Patent and Trademark Office, and to credit any overpayment, to Deposit Account No. 11-1580. A duplicate copy of this sheet is enclosed.

Respectfully submitted,

January 12, 1996

Eric A. Gifford
Registration No. 33,501
Agent for applicant

KOPPEL & JACOBS
31255 Cedar Valley Drive, Suite 302
Westlake Village, CA 91362-4031
(818) 707-1911
DTS086a.cor

ADAPTIVE BIT-ALLOCATION IN TIME AND/OR FREQUENCY AND/OR CHANNELS WITHIN A MULTI-CHANNEL/MULTI-BAND DIFFERENTIAL AUDIO CODING SCHEME

BACKGROUND OF THE INVENTION

Field of the Invention

The invention relates to high-quality encoding and decoding of one or more audio signals such as music or voice signals. More specifically the invention optimises the allocation of quantiser bits at any bit-rate in time and frequency across one or more audio channels within a predictive/differential multi-band coder according to a distortion/quality criteria. These criteria are determined by a psycho-acoustic analysis of the audio signals and/or the energy distributions of the differential signals in frequency and/or time.

This invention applies to all differential audio/speech coding systems with one or more audio channels at bit rates ranging from 32 kbps to 4096 kbps. These include DPCM, ADPCM, sub-band ADPCM, and CELP coders.

Description of the Related Art

In the 1960's speech coders based on PCM were developed. Early work on low bit-rate differential speech coding systems began in the early 1970's. This was intended for applications in the new digital telephone networks being deployed. The bandwidth was restricted to approximately 3.5 kHz. In 1979 Johnston outlined a 7.5 kHz sub-band DPCM that was suitable for speech and music signals. In the early 1980's this work was developed using more sophisticated

adative techniques, but it was not until 1988 that a true wide-bandwidth high quality ADPCM coder was discussed.

In the mid-late 1980's new methods for the coding of very high quality audio signals were developed based on high-resolution filter-banks and/or transform coders within which the quantiser bit-allocations were determined by a psychoacoustic masking model. In general the psychoacoustic masking model tries to establish a quantisation noise audibility threshold at all frequencies, which is used to allocate quantisation bits in such a way as to minimise the likelihood of the quantisation noise becoming audible. If the quantisation noise introduced by the coder is below the audible noise threshold calculated by the psychoacoustic masking model operating on the input signal, the added noise should be in-audible.

The quantisation noise threshold is calculated in the frequency domain from the absolute energy of the input frequency-transformed audio signal. Dominant frequency components of the audio signal tend to mask the audibility of other components which are close in the bark scale (human auditory frequency scale) to the dominant signal. This masking will also apply to signals that occur before (pre-masking) and after (post-masking) the dominant signal.

To date, high quality audio and music coders can be divided into two broad classes of schemes.

1) Medium to high frequency resolution subband/transform coders which adaptively quantize the subband or coefficient samples within the analysis window according to a psychacoustic mask calculation.

These coders exploit the large short-term spectral variances of general music signals by allowing the bit-allocations to adapt according to the spectral energy of the signal. The

high resolution of these coders allows the frequency transformed signal to be applied directly to the psychoacoustic model which is based on a critical band theory of hearing.

2) Low resolution subband coders which make-up for their poor frequency resolution by processing the subband samples using ADPCM. The quantization of the differential subband signals is either fixed or it adapts to minimise the quantization noise power across all or some of the subbands, without any explicit reference to psychoacoustic masking theory.

These coders work because perceptually critical audio signals are generally periodic over long periods of time. This periodicity is exploited by predictive differential quantisation. Splitting the signal into a small number of sub-bands reduces the audible effects of noise modulation, and allows the exploitation of long-term spectral variances in audio signals. If the number of subbands is large the prediction gain within each sub-band is reduced, negating the advantage of using prediction.

SUMMARY OF THE INVENTION

Multichannel encoder and decoder

Coherent Acoustics is an audio coding algorithm that reduces the amount of digital data required to represent digital audio signals, in comparison to linear pulse code modulation. The encoding algorithm operates on a linear PCM representation of the audio signal and produces a coded data stream that requires less bandwidth for transmission and/or less space for storage. When decoded the coded data stream is converted back to linear PCM audio data for subsequent conversion to an analog audio signal. The coded version of the audio signal is subjectively equal to the original signal.

The Coherent Acoustics algorithm operates simultaneously on one or multiple audio signals. One implementation is described which operates on up to eight audio signals. By coding multiple channels simultaneously it is possible to optimise the coding efficency in any single channel. This is achieved by using a common bit-pool that can be adaptively divided up across all the audio signals according to need. The inter-channel adaptive division of the bit-pool occurs through an analysis of each audio signal, which determines the number of bits required to code each channel individually so as to achieve subjective equality with the original linear PCM audio signal. A less efficient implementation evenly divides the total number of bits available across all the audio channels irrespective of the subjective coding demands of the individual channels.

One feature of the encoding algorithm is the ability to remove redundant information resulting from inter-channel correlations. These correlations are analysed across all channels and can be used to further reduce the number of bits required to code each channel. One implementation allows any of the audio channels to be summed together at specific frequencies and coded as a single channel. Another implementation codes the main and side channels (ie Left + Right and Left - Right) of a stereo pair of signals.

Coherent Acoustics can utilize a wide range of bit rates for coding multiple audio channels. One implementation operates from 32 kbits/sec for coding a single audio channel to 4096 kbits/sec for coding eight audio channels. A novel feature is that the decoding computational load per audio channel is intended to be constant irrespective of the total bit rate. This requires that the complexity of the decoding algorithm be inversely proportional to the bit rate, since at higher bit rates the decoding algorithm has less time to decode each encoded sample. The purpose of keeping a constant de-

coding computational load is that a single decoding processor should be able to decode all encoded bit streams.

Single channel encoder and decoder (normal sampling rates)

Within each audio channel the linear PCM is initially filtered using a 32 equi-band multirate polyphase analysis filterbank. The filter may be either perfectly or non-perfectly reconstructing, depending on the bit rate.

Within each subband a number of possible encoding schemes are used.

1) Forward Adaptive Differential PCM routine is used if it is deemed that predictable information is contained in the subband signal. The prediction coefficients are vector quantized while the difference samples can be optionally quantized and encoded using fixed or variable length coding. The quantizer scale factors and the bit allocation indexes are optionally encoded using fixed or variable length coding.

2) In the event that there is little or no predictable information the prediction is switched off and the ADPCM loop reverts to forward Adaptive PCM. Again the subband samples, scale factors and bit allocation indexes are quantized and encoded with fixed or variable length codes.

3) For high frequency subbands both the ADPCM and APCM may be dropped and the samples encoded using a vector quantizer. The scale factors are optionally encoded with fixed or variable length codes. This process allows subbands to be encoded typically with less than 1-bit per sample.

Subband filter bank, encode and decode

For digital audio PCM sample rates of 48kHz and below the coding scheme uses a 32-band filterbank to decorrelate the input signal.

For digital audio PCM sample rates of between 48kHz and 96kHz the coding scheme uses a 32-band filterbank for the bottom half of the input spectrum and an 8-band filterbank to code the upper half of the input spectrum.

For digital audio PCM sample rates above 96kHz the coding scheme uses a 32-band filterbank for the first quarter of the spectrum, a 8-band filterbank for the second quarter, and a single subband for both the third and forth quarters.

By encoding in this way, the data stream is scalable, that is, a decoder does not need to be able to decode data associated with the higher spectra in order to adequately decode the audio.

These and other features and advantages of the invention will be apparent to those skilled in the art from the following detailed description of preferred embodiments, taken together with the accompanying drawings, in which:

BRIEF DESCRIPTION OF THE DRAWINGS

FIG. 1 illustrates a 32-band encoder for a sampling rate of 48kHz;

FIG. 2 illustrates a 32-band decoder for a sampling rate of 48kHz;

FIG. 3 illustrates a hybrid 32-band and 8-band encoder for a sampling rate of 96kHz;

FIG. 4 illustrates a hybrid 32-band and 8-band decoder for a sampling rate of 96kHz;

FIG. 5 shows the decoder of FIG. 4, in which the 96kHz encoded data stream is decoded at a rate of 48kHz;

FIG. 6 illustrates a hybrid 32-8-1-1 band encoder for a

sampling rate of 192kHz;

FIG. 7 illustrates a hybrid 32-8-1-1 band decoder for a sampling rate of 192kHz;

FIG. 8 shows the decoder of FIG. 7, in which the 192kHz encoded data stream is decoded at half the sampling rate;

FIG. 9 shows the decoder of FIG. 7, in which the 192kHz encoded data stream is decoded at one quarter the sampling rate;

FIG. 10 illustrates a 32-band ADPCM encoding/decoding process;

FIG. 11 is a block diagram of the forward adaptive differential PCM encoding block;

FIG. 12 is a block diagram of the forward adaptive differential PCM decoding block;

FIG. 13 is a block diagram illustrating the encoding quantization of optimal prediction coefficients;

FIG. 14 is a block diagram of an alternate quantization procedure;

FIG. 15 is a block diagram of the decoder LUT;

FIG. 16 is a block diagram illustrating the procedure for estimating the subband didfference signal assuming zero quantization error;

FIG. 17 is a block diagram illustrating the calculation of prediction (PMODE) and transient (TMODE) modes at the encoder;

FIG. 18 is a table illustrating the TMODE calculation for subband analyze deploying 2 uniform subbuffers;

FIG. 19 is a table illustrating the TMODE calculation for subband analyze deploying 3 uniform subbuffers;

FIG. 20 is a table illustrating the TMODE calculation for subband analyze deploying 4 uniform subbuffers;

FIG.s 21a and 21b illustrate the calculation of subband scale factors and the entropy coding process, respectively;

FIG. 22 is a block diagram illustrating the quantization of subband scale factors;

FIG. 23 is a block diagram illustrating the differential encoding of 64-level log quantized RMS scale factors;

FIG. 24 is a block diagram illustrating the mapping of differential quantized log RMS values to variable length binare codes;

FIG. 25 is a block diagram illustrating the mapping of transient modes indexes to entropy codes;

FIG. 26 is a block diagram illustrating the bit rate control of entropy ADPCM coding;

FIG. 27 is a block diagram illustrating ADPCM encoding of a single subband using entropy encoding;

FIG. 28 is a block diagram illustrating ADPCM decoding of a single subband using entropy encoding;

FIG. 29 is a block diagram of a hardware implementation of a 6-channel perceptual ADPCM real-time encoder;

FIG. 30 is a block diagram of a DSP mode control interfacing the encoder shown in FIG. 29;

FIG. 31 is a block diagram of a single chip implementation of a 6-channel perceptual ADPCM real-time decoder;

FIG. 32 is a block diagram illustrating subband sample decoding for coherent acoustics

FIG. 33 is a flowchart for the coherent acoustics decoder shown in FIG. 32;

FIG. 34 is a table illustrating transient management for 4 x sub-subframes;

FIG. 35 is a table illustrating transient management for 3 x sub-subframes;

FIG. 36 is a table illustrating transient management for 2 x sub-subframes;

FIG. 37 is a flowchart of a simplified I/O procedure for coherent acoustics; and

FIG. 38 illustrates a typical coherent acoustics data stream comprising 16 audio sub-subframes.

DETAILED DESCRIPTION OF THE INVENTION

This invention seeks to combine the features from both schemes in a single coder. It utilises a high resolution filterband with predictive/differential coding within each sub-band. The high frequency resolution allows exploitation of psychoacoustic masking effects, and the predictive/differential coding in each subband removes redundancy prior to quantisation. The noise masking audibility threshold allocates bits within each sub-band such that the quantisation noise of the predicted/differential signal is below the threshold of hearing.

To date it has been commonly accepted that a direct distortion threshold could not be applied to predicted/differential sub-band signals because of the difficulty in estimating the effect of the quantisation noise on the performance of the predictor. If the performance of the predictor cannot be determined accurately the bit allocation may not be appropriate for the dynamic range of the error signal and the quantiser may clip. Also in a backward adaptive predictive scheme the predictor coefficents are not known a priori.

One scheme uses an external backward adaptive predictor to estimate the error signal. The estimated error signal is used in conjunction with the distortion threshold to set the bit allocation in the main ADPCM loop. In order to ensure that the estimated error signal is accurate the external predictor is updated periodically from the main ADPCM backward adaptive predictor to re-align the outputs of the two predictor loops.

In a forward adaptive predictive scheme the the predictor coefficents in the main ADPCM loop can be derived in advance by analysing a block of input data. This process derives a set of predictor coefficients which minimise the mean

squared error of the difference signal. A by-product of this minimisation is the actual error value, so this figure may be used directly to determine the bit allocation. (The main disadvantage of forward adaption is the need to transmit the predictor coefficents. This overhead can negate the savings in bit rate obtained by using prediction in the first place).

One of the problems of these schemes is that the action of the external predictor in conjunction with the distortion threshold may indicate that the sub-band quantiser requires zero bits. In this case the actual input signal needs to be compared to the distortion threshold to see if the zero bit allocation is still valid. Alternatively the external predictor would need to be re-run with the feed-back loop broken to determine if the zero bit allocation was still accurate.

Another problem arises when the differential signal exceeds the actual input signal. In this case the predictor coefficents should be reset.

Transient Detection

Transient are detected and the appropriate adjustment to quantisation made in individual sub-bands by analysing the sub-band signals as they exit the filter-bank.

Pyschoacoustic Analysis

Pyschoacoustic measurements are used to determine perceptually irrelevant information in the audio signal. Perceptually irrelevant information may be defined as those parts of the audio signal which cannot be heard by human listeners, and can be measured in the time domain, the frequency domain, or in some other basis.

Two main factors influence the pyschoacoustic measurement. One is the frequency dependent absolute threshold of hearing applicable to humans. The other is the masking effect that one sound has on the ability of humans to hear a second sound played simultaneously or even after the first sound. In other words the first sound prevents us from hearing the second sound, and is said to mask it out.

In a subband coder the final outcome of a pyschoacoustic calculation is a set of numbers which specifies the inaudible level of noise for each subband at that instant. These numbers will vary dynamically with the audio signal. The coder will attempt to adjust the quantisation noise floor in the subbands so that the quantisation noise in these subbands is less than the audible level as calculated by the pyschoacoustic analysis.

As the audio signal varies the amount and frequency distribution of the irrelevant information varies, and the quantisation noise within each subband must also be allowed to vary dynamically in accordance with the calculated audible noise floor.

An accurate calculation normally requires a high frequency resolution in the time-to-frequency transform. This implies a large analysis window for the time-to-frequency transform.

The standard analysis window size is 1024 samples which corresponds to a subframe of compressed audio data. A more accurate analysis uses a larger analysis window of 2048 or 4096 samples. This is applicable to a broad class of tonal audio signals which are essentially stationary over many waveform periods. However for transient signals a shorter analysis window may be used of either 512 or 256 samples. The shorter windows may be necessary to reduce the effect of pre-echo induced by the transform based pyschoacoustic calculation. The reason for using shorter analysis windows is that the broadband noise modulation caused by a less accurate subband noise level calculation is generally les audible than the induced pre-echo caused by using a larger analysis window. In other words for tra..sient signals a larger analysis window does not produce more accurate subband noise level levels.

The analysis window is 1024 samples long.

An accurate perceptual noise masking model should be able to calculate the minimum bit rate required to code audio signals such that no coding artifacts are audible. At lower bit rates it will be necessary to introduce audible errors an d/or reduce the bandwidth of the coded audio signal. At higher bit rates the extra bits can be used to increase the safety margin so that the coding artifacts are not easily unmasked by post-processing such as equalization. In both cases the pyschoacoustic model must be modified to both allow for graceful degradation of the audio signal as the bit rate is reduced below the minimum, and to allow for a lowering of the quantization noise floor below the audible limit.

This can be accomplished by having a multi-tiered bit allocation scheme, where the pyschoacoustic model is applied to

one of the tiers. A minimum-mean-squared-error (mmse) calculation, and a maximum absolute error calculation can be used in conjunction with the perceptual model.

Example calculation

1 The audio signal is transformed from time domain amplitude values into frequency domain coefficients, (magnitude + phase representation).

2 Predicted values for the coefficients are calculated based on an analysis of previous values. An unpredictability measure for each coefficient is calculated based on the difference between the actual and predicted values.

3 The linear frequency coefficients are mapped to critical band coefficients, linear in Barks.

1 The energy in each critical band is determined

1 The unpredictability of each critical band weighted by its energy is determined

2 The energy of each critical band is 'spread' over all other frequency coefficients.

3 The energy weighted unpredictability of each critical band is 'spread' over all other frequency coefficients

4 The 'spreading function' calculates the ability of a signal at one frequency to mask a signal at another frequency. This is calculated as a fraction of energy that is 'spread' from one coefficent (the masker) to another (the masked). The fraction of energy becomes the audible noise floor at the masked coefficient below which the masked signal cannot be heard. The spreading function takes into account the 'frequency' distance between the masker and masked coefficients (in Barks), on whether the masker is at a lower or higher frequency than the masked signal, and on the amplitude of the masking coefficient. The spread energy at each frequency can be summed linearly or nonlinearly

5 A tonality index is generated for each critical band

6 The signal to noise ratio, and power ratio of each critical band is calculated. These are affected by the tonality of each critical band, and on the differing abilities of pure tones to mask noise and noise to mask pure tones.

7 The actual noise energy threshold for each critical band is calculated, taking into account the absolute theshold of hearing for that frequency.

8 The critical band noise threshold is converted to subband noise thresholds

9 The final outcome is a signal-to-noise mask ratio for each critical band which can be used to determine the minimum bit allocation for each subband that will produce an inaudible amount of quantization noise.

This calculation can be simplified by grouping coefficients into a smaller number of wider bandwidth subbands. The subbands could be non-uniform in frequency bandwidth, and could be based on 'critical bark' bands.

The tonality of the frequency coefficients could also be calculated in different ways eg directly from the prediction gain within each subband (critical band), or by a direct analysis of the magnitude differences between neighbouring frequency coefficents (individually or grouped within critical bands). The prediction gain within each subband can be mapped to a set ot tonality ratios such that a sine wave and white noise in any subband produce prediction gains that have tonality ratios of 1.0 and 0.0 repectively.

Bit-allocation Routine

The output of the pyschoacoustic model is a signal-to-mask (SMR) ratio for each of the 32 subbands. The SMR is indicative of the amount of quantisation noise that a particular subband can endure and hence is also indicative of the number of bits required to quantise the samples in the subband,

ie a large SMR (>>1) indicates that a large number of bits are required, a small SMR (>0) indicates that fewer bits are required. If the SMR < 0 then the audio signal lies below the noise mask threshold, and no bits are required for quantisation.

If the SMRs for the 32 subbands demand more bits than are available then the model must be relaxed in order to release bits. This can occur in many ways.

10 The subbands with the smallest (positive) SMRs give up one bit at a time

11 The bandwidth is reduced by allocating zero bits starting from the upper bands

12 High frequency imaging is reduced by introducing joint-channel coding starting from the upper subbands.

If the SMRs for the 32 subbands require fewer bits than are available then the extra bits can be allocated according to many different criteria.

13 The subbands with the largest SMRs can be allocated more bits one bit at a time

14 Low frequency and other critical frequency subbands can be allocated more bits

15 The most important channels in a multichannel format can be allocated more bits

16 The extra bits can be distributed on a mmse basis uniformly across all subbands

1 Subbands with zero bit allocation can be assigned bits

1 If the bandwidth has been reduced this can be increased by allocating bits to high frequency subbands

Coding Strategy for Audio Sampling Rates 8 - 48kHz

For sampling rates in the range 8 - 48kHz the coding system employs a uniform 32-band analysis filter bank. Figures 1 and 2 illustrate the concept for a 32-band encoder **10** and decoder **12** respectively operating at a sampling rate of 48kHz. The audio spectrum, 0 - 24kHz, is initially split using a 512-tap 32-band decimation filter bank **14** resulting in a bandwidth of 750Hz per subband. Each subband signal is passed through an encoding process **16** and the resulting coded data from each subband packed **18** and output as multiplexed compressed data stream (fig 1). The decoder (fig 2) first receives the compressed data stream, separates out the coded data for each subband **20**. Once decoded **22**, the subband signals are reconstructed back to a single PCM digital audio signal (fs=48kHz) using 512-tap 32-band uniform interpolation filter bank **24**.

Coding Strategy for Audio Sampling Rates 48 - 96kHz

For sampling rates in the range 48 - 96kHz the coding system splits the audio spectrum in two and employs a uniform 32-band analysis filter bank for the bottom half and an 8-band analysis filter bank for the top half.

Figures 3 and 4 illustrate the encoding **26** and decoding processes respectively, for a sampling rate of 96kHz. The audio spectrum, 0 - 48kHz, is initially split using a 256-tap 2-band decimation filter bank **28** giving an audio bandwidth of 24kHz per band. The bottom band (0 - 24kHz) is split **14** and encoded **16** in 32 uniform bands in the same manner as illustrated in figures 1 and 2. The top band (24 - 48kHz) however, is split and encoded in 8 uniform bands. If the delay of the 8-band decimation/interpolation filter bank is not equal to that of the 32-band filter banks then a de-

lay compensation stage must be employed somewhere in the 24 - 48kHz signal path to ensure both time waveforms line up prior to the 2-band recombination filter bank at the decoder. In the 96kHz sampling encoding system illustrated in figure 3, the 24 - 48kHz audio band is delayed by 384 samples **34** and then split into the 8 uniform bands using a 128-tap interpolation filter bank **36**. Each of the subbands have a bandwidth of 3kHz and these are encoded **38** and packed **40** with the coded data from the 0 - 24kHz band to form the compressed data stream.

On arrival at the decoder **42**, figure 4, the compressed data stream is unpacked **44** and the codes for both the 32-band decoder (0 - 24kHz region) and 8-band decoder (24 - 48kHz) separated out and fed to their respective decoding stages **46** and **22**. The eight and 32 decoded subbands are reconstructed using 128-tap and 512-tap uniform interpolation filter banks **50** and **24** and subsequently recombined using a 256-tap 2-band uniform interpolation filter **54** bank to produce a single PCM digital audio signal with a sampling rate of 96kHz.

In the case when it is desirable for the decoder to operate at half the sampling rate of the compressed data stream, this can be conveniently carried out by discarding the upper band encoded data (24 - 48kHz) and decoding only the 32-subb ands in the 0 - 24kHz audio region. This process is illustrated in figure 5 where a 96kHz sampling compressed data stream is decoded at a sampling rate of 48kHz.

Coding Strategy for Audio Sampling Rates 96 kHz - 192 kHz

For sampling rates in the range 96 - 192kHz the coding system splits the audio spectrum into four uniform bands and employs a uniform 32-band analysis filter bank **14** for the

first band, an 8-band analysis filter bank **36** for the second band and single band coding processes **60** and **62** for both the third and fourth bands.

Figures 6 and 7 illustrate the encoding and decoding processes respectively, for sampling rates of 192kHz. The audio spectrum, 0 - 96kHz, is initially split using a 256-tap 4-band decimation filter bank **64** giving an audio bandwidth of 24kHz per band. The first band (0 - 24kHz) is split and encoded in 32 uniform bands in the same manner as is illustrated in figures 1 and 2. The second band (24 - 48kHz) is split, delayed **66** and encoded in 8 uniform bands in the same manner as is illustrated in figures 3 and 4. The third and fourth bands are processed directly. In order to ensure the time waveforms for these bands line up with those for the first and second bands prior to the 4-band recombination filter bank at the decoder, delays **68** and **70** must be placed somewhere in the 48 - 72kHz and 72 - 96kHz signal paths. In the 192kHz sampling coding system illustrated in figure 6, both 48 - 72kHz and 72 - 96kHz bands are delayed by 511 samples to match the delay of the 32-band decimation/interpolation filter bank. The two upper bands are encoded and packed **72** with the coded data from the 24 - 48kHz and 0 - 24 kHz bands to form the compressed data stream.

On arrival at the decoder, figure 7, the compressed data stream is unpacked **74** and the codes for both the 32-band decoder (0 - 24kHz region), the 8-band (24 - 48kHz) and the single band decoders (48 - 72kHz and 72 - 96kHz regions) separated out and fed to their respective decoding stages **76**, **78**, **46** and **22**. The single bands are recombined with the 0 - 24kHz and 24 - 48kHz bands using a 256-tap 4-band uniform interpolation filter bank **80** to produce a single PCM digital audio signal with a sampling rate of 192kHz.

In the case when it is desirable for the decoder to operate at half the sampling rate of the compressed data stream, this can be conveniently carried out by discarding the encoded data associated with the two upper bands (48 - 72kHz and 72 - 96kHz) and decoding 82 only the 8-subband data (24 - 48kHz) and 32-subband data (0 - 24kHz). This process is illustrated in figure 8 where a 192kHz sampling compressed data stream is decoded at a sampling rate of 96kHz.

In the case when it is desirable for the decoder to operate at one quarter the sampling rate of the compressed data stream, this can be conveniently carried out by discarding the encoded data associated with the two upper bands (48 - 72kHz and 72 - 96kHz) and that for the 8-subband decoder data (24 - 48kHz), decoding only the 32-subband data (0 -24kHz). This process is illustrated in figure 9 where a 192kHz sampling compressed data stream is decoded at a sampling rate of 48kHz.

Generalized Coding Scheme within the 32-band Analysis Filter Bank

In all the coding strategies described, the 32-band encoding/decoding process is carried out on the lowest audio frequencies, for example between 0 - 24kHz for either 48kHz, 96kHz and 192kHz sampling frequencies. In this scheme, a forward adaptive differential PCM (ADPCM) normally operates in each subband as illustrated in figure 10. The input PCM digital audio signal **84** is first split into 32 uniform frequency bands **86** and the samples output from each subband buffered and applied to an analysis stage **88**. The analysis generates optimal predictor coefficients, differential quantizer bit allocations and optimal quantizer scale factors for the buffered subband samples. This data, or side information, is fed forward to the ADPCM stages **90** and to the data multiplexer **92** (packer) in order to be sent to the decoder along with the differential subband codes. The subband samples are then encoded by the ADPCM process and the differential codes input to the multiplexer. The differential codes and the side information from each subband is packed into a single bit stream **94** and transmitted to the decoder.

On arrival at the decoder (figure 10) the data stream is demultiplexed **96**, or unpacked, back into the individual subbands. The scale factors and bit allocations are first installed into the inverse quantizers **98** together with the predictor coefficients for each subband. The differential codes are then reconstructed using the ADPCM process **100** for each subband. The subbands are finally amalgamated back to a single PCM audio signal **102** using a 32-band interpolation filter bank **104**.

The operation of the ADPCM encoder **90** is illustrated in

figure 11 together with the algorithmic steps 1-7. The first step is to generate a predicted sample p(n) from a linear combination of H previous reconstructed samples. This prediction sample is then subtracted from the input to give a difference sample d(n). The difference sample is scaled by dividing it with the RMS (or PEAK) scale factors in order to better match the amplitude of the difference sample to that of the quantizer characteristic Q. The scaled difference sample ud(n) is applied to a quantizer characteristic with L levels of step-size SZ, as determined by the bit allocation ABIT. The quantizer produces a level code QL(n) for each scaled difference sample ud(n) applied. These level codes are ultimately transmitted to the decoder ADPCM stage. In order to update the predictor history the quantizer level codes QL(n) are locally decoded using an inverse quantizer 1/Q with identical characteristics to that of Q. By mapping QL(n) to 1/Q a quantized scaled difference sample is produced ud(n) which is rescaled by multiplying it with the RMS (or PEAK) scale factor, producing d(n). A quantized version of the original input sample x(n) is reconstructed by adding the initial prediction sample p(n) to the quantized difference sample d(n). This sample is then used to update the predictor history.

The operation of the ADPCM decoder **100** is illustrated in figure 12 together with the algorithmic steps 1-4. The first step is to extract the ABIT, RMS (or PEAK) and A_H predictor coefficients from the incoming bit stream. Next a predicted sample p(n) is generated from a linear combination of H previous reconstructed samples. During normal operation both the previous reconstructed samples and the predictor coefficients will be identical at encoder and decoder. Hence the predicted samples p(n) will also be identical. The received quantizer level code QL(n) is inverse quantized using 1/Q. Since the ABIT allocations will be the same at encoder and

decoder, the quantized scaled difference samples ud(n) will be identical to those at the encoder. These samples are rescaled by multiplying it with the RMS (or PEAK) scale factor, producing d(n). Again, since the scale factors are equivalent at encoding and decoding ends, d(n) here will also be the same as that at the encoder. The reconstructed samples x(n) are finally produced by adding the prediction sample p(n) to the quantized difference sample d(n) and are output as the decoded subband samples. As with the encoding ADPCM process, the reconstructed samples are also used to update the predictor history.

In summary, the performance of forward ADPCM coding depends mainly on the scale factor calculation, the bit allocation and the amplitude of the difference samples d(n).

1. The difference sample amplitude must on average be less than the input sample x(n) so that it is possible to use fewer quantization levels to code the difference signal with the same signal to quantization noise ratio (SNR). This means that the predictor must be capable of exploiting periodicity in the input samples.

2. The RMS or PEAK scale factors must be adjusted such that the scaled difference sample amplitudes are optimally matched to the input range of the quantizer in order to maximize the SNR of the reconstructed samples x(n) for any given bit allocation ABIT. If the scale factor is over estimated then the difference samples will tend to utilize only the lower quantizer levels and hence result in sub-optimal SNR values. If the scale factors are under estimated then the quantizer range will not adequately cover the difference samples excursions and the occurrence of clipping will rise, leading also to a reduction in the reconstruction SNR.

3. The bit allocation determines the number of quantizer steps and the step-size within any characteristic and hence the quantization noise level induced in the reconstructed signal (assuming optimal scaling). Generally speaking, the reconstruction SNR rises by approximately 6dB for every doubling in the number of quantization levels.

Estimation of Optimal Prediction Coefficients

The H prediction coefficients are generated separately for each subband using the standard autocorrelation method optimized over a block of subband samples x(n). The analysis block may be overlapped with previous blocks and/or be windowed using a function which reduces the sample amplitudes at the block edges in order to improve the frequency resolution of the block.

Quantization of Optimal Prediction Coefficients

The predictor coefficients for each subband are quantized using an H element vector quantizer.

1. The quantizer table **106** may contain a range of prediction coefficient vectors **108** where the matching procedure **110** aims to locate the vector which exhibits the lowest weighted mean squared error between itself and the optimal coefficients. The optimal coefficients for each subband are then replaced with these "quantized" vectors as illustrated in figure 13.

2. Alternatively, the quantizer table **106** may contain a range of PARCOR vectors **112** where the matching procedure aims to locate the vector which exhibits the lowest weighted mean squared error between itself and the PARCOR represen-

tation of the optimal predictor coefficients as illustrated in figure 14. The minimal PARCOR vector is then converted back **114** to quantized predictor coefficients **108** which are used locally in the ADPCM loops (figure 14). The PARCOR to quantized prediction coefficient conversion is best achieved using another look-up table **116** to ensure that the prediction coefficient values are identical to those in the decoder look-up table, figure 15.

3. Alternatively, the quantizer table may contain a range of log-area vectors where the matching procedure aims to locate the vector which exhibits the lowest weighted mean squared error between itself and the log-area representation of the optimal coefficients (figure 14). The minimal log-area vector is then converted back to quantized predictor coefficients which are used locally in the ADPCM loops. The log-area to quantized prediction coefficient conversion is best achieved using another look-up table to ensure that the coefficient values are identical to those in the decoder look-up table (figure 15).

In all cases the respective code book addresses are transmitted to the decoder where they will be used to extract identical prediction coefficient vectors using a locally resident vector table as illustrated in figure 15. These predictor coefficients will be used in the decoding ADPCM loops.

Estimation of Prediction Difference Signal d(n)

A significant quandary with ADPCM is that the difference sample sequence d(n) cannot be easily predicted ahead of the actual recursive process illustrated in figure 11. A fundamental requirement of forward adaptive subband ADPCM is that the difference signal energy be known ahead of the ADPCM coding in order to calculate an appropriate bit allocation for the quantizer which will produce a known quantization error, or noise, level in the reconstructed samples. Knowledge of the difference signal energy is also required to allow an optimal difference scale factor to be determined beforehand.

Unfortunately the difference signal energy not only depends on the characteristics of the input signal but also on the performance of the predictor. Apart from the known limitations such as the predictor order and the optimality of the predictor coefficients, the predictor performance is also affected by the level of quantization error, or noise, induced in the reconstructed samples. Since the quantization noise is dictated by the final bit allocation ABIT and the difference scale factor RMS (or PEAK) values themselves, the difference signal energy estimate must be arrived at iteratively.

Step 1. Assume Zero Quantization Error

The first difference signal estimation is made by passing the buffered subband samples through an estimate differential process which does not quantize the difference signal as illustrated in figure 13. The algorithmic steps are also shown in this diagram. By estimating in this way, the effects of the scale factor and the bit allocation values are removed from the calculation. The effect of the

quantization error on the predictor coefficients is also removed from the process by using the vector quantized coefficients in the estimate predictor. Furthermore, to enhance the accuracy of the estimate predictor, the history samples form the actual ADPCM predictor accumulated at the end of the previous block are also copied into the estimate predictor history prior to the calculation. This ensures that the estimate predictor starts off from where the real ADPCM predictor left off at the end of the previous input buffer.

The main discrepancy between this estimate and the actual process is that the effects of quantization noise in the reconstructed samples x(n) on the prediction accuracy are ignored. For quantizers with large numbers of levels the noise level will generally be small (assuming proper scaling) and therefore the actual difference signal energy will closely match that calculated in the estimate. However, when the number of quantization levels in the subband is small, as is the case for typical low bit rate audio coders, the actual predicted signal, and hence the difference signal energy, may differ significantly from the estimated one, leading to coding noise floors which are quite different to those predicted earlier in the adaptive bit allocation process.

Despite this, the variation in prediction performance may not be significant for the application or bit rate and so the estimate could be used directly to calculate the bit allocations and the scale factors. An additional refinement would be to compensate for the performance loss by deliberately over-estimating the difference signal energy if it is likely that a quantizer with a small number of levels is to be allocated to that subband. The over-estimation may also be graded according to changing number of quantizer levels,

for improved accuracy.

Step 2. Recalculate using Estimated Bit Allocations and Scale Factors

Once the bit allocations and scale factors have been generated using the first estimation difference signal, their optimality may be tested by running a further ADPCM estimation process, this time using the estimated ABIT and RMS (or PEAK) values in the ADPCM loop (figure 12). As with the first estimate, the estimating predictor history is copied from the actual ADPCM predictor prior to starting the calculation. to ensure both predictors start from the same point. Once the buffered input samples have all passed through this second estimation loop, the resulting noise floor in each subband is compared with that assumed in the adaptive bit allocation process. Any significant discrepancies can be compensated for by modifying the bit allocation and/or scale factor.

Step 2 can be repeated as often as is necessary in order to suitably refine the distributed noise floor across the subbands, each time using the most current difference signal estimate to calculate the next set of bit allocations and scale factors.

Calculation of Subband Prediction Modes (PMODE)

Separate prediction modes (PMODEs) are transmitted for each subband, and at a rate equal to the update rate of the linear predictors in the encoder and decoder ADPCM processes. The purpose of the PMODE parameter is to indicate to the decoder if the particular subband will have any prediction coefficient vector address associated with its coded audio data block. When PMODE=1 in any subband then a predictor

coefficient vector address will always be included in the data stream. When PMODE=0 in any subband then a predictor coefficient vector address will never be included in the data stream and the predictor coefficients are set to zero at both encoder and decoder ADPCM stages.

By transmitting PMODEs forward to the decoder, the encoder can arbitrarily switch on or off the prediction process without any change to the decoding algorithm. For example, PMODEs can be set high in any or all subbands if the ADPCM coding gain variations are not important to the application. Conversely PMODES can be set low if, for example, certain subbands are not going to be coded at all, the bit rate of the application is high enough that prediction gains are not required to maintain the subjective quality of the audio, or that the splicing characteristic of ADPCM encoded audio is simply not desirable, as might be the case for audio editing applications.

Normally PMODE will be set to one when the prediction gain (ratio of the input signal energy and the estimated difference signal energy), measured during the estimation stage for a block of input samples, exceeds some positive threshold. Conversely, if the prediction gain is measured to be less than the positive threshold the ADPCM predictor coefficients may be set to zero at both encoder and decoder, for that subband, and the respective TMODE at zero.

The prediction gain threshold is set such that it equals the distortion rate of the transmitted predictor coefficient vector overhead. This is done in an attempt to ensure that when PMODE=1, the coding gain for the ADPCM process is always greater than or equal to that of a forward adaptive PCM (APCM) coding process. Otherwise by setting PMODE to zero and resetting the predictor coefficients, the ADPCM process

simply reverts to APCM.

The calculation of the PMODEs begins by analyzing the buffered subband input signal energies with respect to the corresponding buffered estimated difference signal energies obtained in the first stage estimation **118**, i.e. assuming no quantization error (figure 16). Figure 17 illustrates the PMODE calculation process **120**. Both the input samples x(n) and the estimated difference samples ed(n) are buffered **122** and **124** for each subband separately. The buffer size equals the number of samples contained in each predictor update period. The prediction gain **126** is then calculated as;

$$\textbf{Prediction Gain (dB)} = 20.0 * \textbf{Log}_{10} \left(\textbf{RMS}_{x(n)} / \textbf{RMS}_{ed(n)}\right)$$

where $RMS_{x(n)}$ = root mean square value of the buffered input samples x(n), and $RMS_{ed(n)}$ = root mean square value of the buffered estimated difference samples ed(n).

For positive prediction gains the difference signal is, on average, smaller than the input signal and hence a reduced reconstruction noise floor may be attainable using this ADPCM process over APCM for the same bit rate. For negative gains the ADPCM is making the difference signal, on average, greater than the input signal, and this may result in higher noise floors over APCM for the same bit rate. Normally the prediction gain threshold which switches PMODE on will be positive and will have a value which takes into account the extra channel capacity which is consumed by transmitting the predictor coefficients vector address. For example, if the predictors were updated every 50 ms by transmitting a 12-bit prediction coefficient vector, then for a 32-band filter bank the predictor overhead in each subband for which PMODE=1 is 12 bits / 75 samples, or 0.16 bits per sample. Theoretically the loss of 0.16 bits per subband sample translates to an average increase in noise in the reconstructed subband samples of approximately 1dB (assuming

linear quantization). Hence the prediction gain threshold in this example would be at least 1dB in an attempt to keep the predictor off during periods when differential coding gains are not possible.

Higher thresholds may be necessary if, for example, the differential scale factor quantizer cannot accurately resolve it.

As discussed earlier, it may be desirable to estimate the difference signal energy more than once (i.e. use Step 2) in order to better predict the interaction between the quantization noise and the predictor performance with the ADPCM loop. Likewise, the validity of PMODE can also be re-checked at the same time. This would ensure that any subband, which experiences a loss in prediction gain as a result of using the quantizer requested by the bit allocation such that the new gain value fell below the threshold, will have its PMODE reset to zero.

Calculation of Subband Transient Modes (TMODE)

Transient modes (TMODE) are calculated separately for each subband and indicate the number of scale factors and the samples in the estimated difference signal ed(n) buffer when PMODE=1 or in the input subband signal x(n) buffer when PMODE=0, for which they are valid. TMODEs are updated at the same rate as the prediction coefficient vector addresses and are transmitted to the decoder. The purpose of the transient modes is to reduce audible coding "pre-echo" artifacts in the presence of signal transients. A transient is defined as signal which transitions rapidly between a low amplitude phase and a high amplitude phase. Due to the fact that scale factors are averaged over a block of subband difference samples. If a rapid change in signal amplitude takes place in a block, i.e. a transient occurs, the calculated scale factor tends to be much larger than would be optimal for the low amplitude samples preceding the transient. Hence the quantization error in samples preceding transients can be very high and it is this noise which is perceived as pre-echo. In practice, the transient mode is used to modify the subband scale factor averaging block length to limit the influence of a transient on the scaling of the differential samples immediately preceding it. The motivation for doing this is due to the pre-masking phenomena inherent in the human auditory system which suggests that in the presence of transients noise can be masked prior to a transients provided that its duration is kept short.

The process is illustrated in figure 17 for each subband. Depending on the value of PMODE either the contents of the subband sample buffer x(n) or that of the estimated difference buffer ed(n) is copied into the transient analysis buffer **128**. Here the buffer contents is divided uniformly into either 2, 3 or 4 sub-buffers depending on the sample size of the analysis buffer. For example, if the analysis

buffer was 32 subband samples (21.3ms @1500Hz) the buffer could be partitioned into 4 sub-frames of 8 samples each, giving a time resolution of 5.3ms for a subband sampling rate of 1500Hz. Alternatively if the analysis window was configured at 16 subband samples, then the buffer need only be divided into two to give the same time resolution.

The signal in each sub-buffer is analyzed and the transient status of each, other than the first, determined. If any sub-buffers are declared transient, two separate scale factors are generated for the analysis buffer. The first scale factor is calculated from samples in the sub-buffers preceding the transient sub-buffer. The second scale factor is calculated from samples in the transient sub-buffer together with all proceeding sub-buffers.

The transient status of the first sub-buffer is not calculated since the quantization noise is automatically limited by the start of the analysis window itself. If more than one sub-buffer is declared transient, then only the one which occurs first is considered. If no transient sub-buffers are detected at all, then only a single scale factor is calculated using all the samples in the analysis buffer.

In this way scale factors values which include samples which exhibit transients, cannot be used to scale earlier samples more than a sub-buffer period back in time. Hence the pre-transient quantization noise is limited to a sub-buffer period.

Transient Declaration

A sub-buffer is declared transient if the ratio of its energy over the preceding sub-buffer exceeds a transient threshold (TT), and the energy in the preceding sub-buffer is below a pre-transient threshold (PTT). The values of TT

and PTT will depend on the bit rate and the degree of pre-echo suppression required and are normally varied until perceived pre-echo distortion matches the level of other coding artifacts if they exist. Increasing TT and/or decreasing PTT values will reduce the likelihood of sub-buffers being declared transient, and hence will reduce the bit rate associated with the transmission of the scale factors. Conversely, decreasing TT and/or increasing PTT values will increase the likelihood of sub-buffers being declared transient, and hence will increase the bit rate associated with the transmission of the scale factors.

Since TT and PTT are individually set for each subband, the sensitivity of the transient detection at the encoder can arbitrarily set for any subband. For example, if it is found that pre-echo in high frequency subbands is less perceptible than in lower frequency subbands, then the thresholds can be set to reduce the likelihood of transients being declared in the higher subbands. Moreover, since TMODEs are embedded in the compressed data stream, the decoder never needs to know the transient detection algorithm in use at the encoder in order to properly decode the TMODE information.

The strategy behind the transient mode calculation is illustrated for the three configurations in figures 18, 19, 20:

Two Sub-buffer Configuration

If the first sub-buffer is declared transient or if no transient sub-buffers are detected, then TMODE=0. Otherwise TMODE=1.

Three Sub-buffer Configuration

If the first sub-buffer is transient, or if no transient sub-buffers are detected, then TMODE=0. If the second sub-buffer is transient but not the first, then TMODE=1. If only the third sub-buffer is transient then TMODE=2.

Four Sub-buffer Configuration

If the first sub-buffer is transient, or if no transient sub-buffers are detected, then TMODE=0. If the second sub-buffer is transient but not the first, then TMODE=1. If the third sub-buffer is transient but not the first or second, then TMODE=2. If only the fourth sub-buffer is transient then TMODE=3.

Calculation of Scale Factors

In the case when TMODE=0 the scale factors are calculated over all sub-buffers. When TMODE=1, the first scale factor is calculated over the first sub-buffer and the second scale factor over all proceeding sub-buffers. When TMODE=2 the first scale factor is calculated over the first and second sub-buffers and the second scale factor over all proceeding sub-buffers. When TMODE=3 the first scale factor is calculated over the first, second and third sub-buffer and the second scale factor is calculated over the fourth sub-buffer.

ADPCM Encoding and Decoding using TMODEs

When TMODE=0 the single scale factor is used to scale the subband difference samples for the duration of the entire analysis buffer and this scale factor will be transmitted to the decoder to facilitate inverse scaling. When TMODE>0 then two scale factors are used to scale the subband difference samples and both transmitted to the decoder. For any TMODE each scale factor is used to scale the respective differential samples used to generate the scale factor in the first place, as described above.

Calculation of Subband Scale Factors (RMS or PEAK)

The process of calculating the scale factors **130** in each subband is illustrated in figure 21a. Depending on the value of PMODE for that subband, either the estimated difference samples ed(n) or input subband samples x(n) are used to calculate the appropriate scale factor(s) **132**. The TMODEs are used in this calculation to determine both the number of scale factors and the sample segregation in the buffer, figure 17.

RMS scale factor calculation

For the j th subband with L sample estimated difference sample buffer divided into NSB uniform sub-buffers, rms scale factors are calculated as follows:

When TMODE=0 then the single rms value is;

RMS_j = SQRT ((SUM of $ed_j(n)*ed_j(n)$ for n= 1, L) /L)

When TMODE >0 then the two rms values are;

$RMS1_j$= SQRT ((SUM of $ed_j(n)*ed_j(n)$ for n=1, (TMODE*L/NSB)) /L)

$RMS2_j$= SQRT ((SUM of $ed_j(n)*ed_j(n)$ for n=1, (1 +TMODE*L/NSB),) /L)

If PMODE=0 then the $ed_j(n)$ samples are replaced with the input samples $x_j(n)$.

PEAK scale factor calculation

For the j th subband with an L sample estimated difference sample buffer divided into NSB uniform sub-suffers, peak scale factors are calculated as follows;

When TMODE=0 then the single peak value is;

$PEAK_j$ = MAX(ABS($ed_j(n)$)) for n=1, L

When TMODE>0 then the two peak values are;

$PEAK1_j$ = MAX(ABS($ed_j(n)$)) for n=1, (TMODE*L/NSB)

$PEAK2_j$ = MAX(ABS($ed_j(n)$)) for n= (1+TMODE*L/NSB),

L

If PMODE=0 then the $ed_j(n)$ samples are replaced with the input samples $x_j(n)$.

Quantization of Bit Allocation Indexes (ABIT)

The bit allocation indexes are generated for each subband and each audio channel by an adaptive bit allocation routine in the global bit management process. The purpose of the indexes at the encoder is to indicate the number of levels necessary to quantize the difference signal in order to obtain a subjectively optimum reconstruction noise floor in the decoder audio. At the decoder they indicate the number of levels necessary for inverse quantization. Indexes are generated for every analysis buffer and their values can range from 0 to 27. The relationship between index value, the number of quantizer levels and the approximate resulting differential subband SN_QR is tabulated below.

Table A

Bit allocation index ABIT vs. quantizer levels, quantizer code length and quantized differential signal to noise ratio.

ABIT Index	# of Q Levels	Code Length (bits)	SN_QR(dB)
0	0	0	-
1	3	variable	8
2	5	variable	12
3	7 (or 8)	variable (or 3)	16
4	9	variable	19
5	13	variable	21
6	17 (or 16)	variable (or 4)	24
7	25	variable	27
8	33 (or 32)	variable (or 5)	30
9	65 (or 64)	variable (or 6)	36
10	129 (or 128)	variable (or 7)	42
11	256	8	48
12	512	9	54
13	1024	10	60
14	2048	11	66

15	4096	12	72
16	8192	13	78
17	16384	14	84
18	32768	15	90
19	65536	16	96
20	131072	17	102
21	262144	18	108
22	524268	19	114
23	1048576	20	120
24	2097152	21	126
25	4194304	22	132
26	8388608	23	138
27	16777216	24	144

The bit allocation indexes (ABIT) are either transmitted to the decoder directly using 4-bit unsigned integer code words, 5-bit unsigned integer code words, or using a 12-level entropy table. Typically the entropy coding would be deployed for low-bit rate applications in order to conserve bits. The method of encoding ABIT is set by the mode control at the encoder and is transmitted to the decoder.

4-bit Coding of ABIT Indexes

In this mode 4-bit unsigned integers are used to represent the ABIT indexes. The index range is therefore 0-15, limiting the number of quantizer levels which can be allocated in the global bit management to 4096. This mode is used for medium bit-rate applications.

5-bit Coding of ABIT Indexes

In this mode 5-bit unsigned integers are used to represent the ABIT indexes. This code length covers the entire index range. This mode is used for high bit-rate applications.

12-level Entropy Coding

The entropy coding process **134** is as follows; the bit allocation indexes ABIT(j) for the j subbands are mapped to a number (p) of 12 level variable length code books, each optimal for a different input statistical characteristic. This process is illustrated in figure 21b. The indexes are mapped to all the 12-level tables **136** and the total bit usage associated with each table (NB_p) calculated **138**. The table which provides the lowest bit usage over the mapping process is selected using the BHUFF index **140**. The mapped codes, VABIT(j), are extracted from this table, packed and transmitted to the decoder along with the BHUFF index word. The decoder, which holds the same set of 12-level inverse tables, uses the BHUFF index word. The decoder, which holds the same set of 12-level inverse tables, uses the BHUFF index to direct the incoming variable length codes, VABIT(j), to the proper table for decoding back to the ABIT indexes.

Since the entropy table uses only 12-levels, the index range is 0-11, limiting the maximum number of quantizer levels

which can be allocated in the global bit management to 256. This ABIT coding mode is used for low bit-rate applications.

Entropy Coding for ADPCM Quantizer Level Codes $QL_j(n)$

The method of encoding the differential quantizer level codes depends on the size of the quantizer selected as indicated by the ABIT index. For ABIT indexes ranging from 1 to 10 (3 level to 129 level) the level codes are generally encoded using entropy (variable code length) tables. Under certain circumstances the 3, 6, 8, 9 and 10 indexes can also indicate fixed length codes and may be transmitted without modification. For ABIT indexes ranging from 11 to 27 (256-level to 16777216-level) the level codes are always fixed length and are transmitted to the decoder without modification.

Entropy Coding for ABIT Indexes 0 - 10

If differential quantizer level codes need to be encoded using entropy tables, the process is as follows. The level codes $QL_j(n)$ generated in each subband using the same bit allocation are grouped together and mapped to a number (p) of variable length code books whose size is determined by the ABIT index, (table 1). Each code book is optimal for different input statistical characteristics. This process is illustrated in figure 21b. On coding the subband samples $x_j(n)$ through the ADPCM process, the level codes $QL_j(n)$ associated with the same ABIT index value are buffered and mapped to all the available entropy tables and the total bit usage associated with each table (NB_p) calculated. The table which provides the lowest bit usage over the mapping process is selected using the SFI index. The mapped codes, $VQL_j(n)$, are extracted from this table, packed and transmitted to the

decoder along with the SEL index word. The decoder, which holds the same set of inverse tables, uses the ABIT and SEL indexes to direct the incoming variable length codes, $VQ_{Lj}(n)$ to the proper table for decoding back to the differential quantizer level codes $QL_j(n)$. An SEL index is generated for each variable length bit allocation index (1-10) used in an audio channel.

Fixed length coding for ABIT Indexes 3, 6, 8, 9 and 10

For medium to high bit-rate applications it may be desirable to limit the use of entropy coding to reduce the computational overheads involved in unpacking the variable length codes at the decoder. In this case indexes 3, 6, 8, 9 and 10 may revert to fixed length mid-tread quantizers of 8, 6, 2, 4 and 128 levels respectively and indexes 4, and 7 may be dropped altogether by the bit allocation routine. Indexes 1 and 2 may continue to be used for 3-level and 5-level entropy coding, or they also may be dropped also. In this case however the minimum non-zero bit allocation would be 3 bits.

The choice of fixed length quantization is driven by the encoder mode control and is transmitted to the decoder to ensure the proper choice of inverse quantizer.

Quantization of Subband Scale Factors

In order to transmit the scale factors to the decoder they must be quantized to a known code format. In this system they are quantized using either a uniform 64-level logarithmic characteristic, a uniform 128-level logarithmic characteristic, or a variable rate encoded uniform 64-level logarithmic characteristic. The 64-level quantizer exhibits a 2.25dB step-size in both cases, and the 128-level a 1.25dB step-size. The choice of coding methods depends on the bit rate of the application. The 64-level quantization is used for low to medium bit-rates, the additional variable rate coding is used for low bit-rate applications, and the 128-level is generally used for high bit-rates.

The process of quantization **142** is illustrated in fig 22. The scale factors, RMS or PEAK, are first converted to the

log domain **144** and then applied either to a 64-level or 128-level uniform quantizers **146, 148** as determined by the encoder mode control **150**. The range of the 128-level is sufficient to cover scale factors with a dynamic range of approximately 160dB, and that of the 64-level approximately 144dB. The 128-level upper limit is set to cover the dynamic range of 24-bit input PCM digital audio signals. The 64-level upper limit is set to cover the dynamic range of 20-bit input PCM digital audio signals.

On quantization, the log scale factors are mapped to the quantizer and the scale factor replaced with the nearest quantizer level code RMS_{QL} (or $PEAK_{QL}$). In the case of the 64-level quantizer these codes are 6-bits long and range between 0-63. In the case of the 128-level quantizer the codes are 7-bits long and range between 0-127.

Inverse quantization is achieved simply by mapping the level codes back to the respective inverse quantization characteristic to give RMS_q (or $PEAK_q$) values. Quantized scale factors are used both at the encoder and decoder and decoder for the ADPCM (or APCM if PMODE=0) differential sample scaling, thus ensuring that both scaling and inverse scaling processes are identical.

If the bit-rate of the 64-level quantizer codes needs to be reduced, additional entropy, or variable length coding is performed. The 64-level codes are first 1st order differentially encoded **152** across the j subbands, starting at the second subband (j=2) to the highest active subband. This process is illustrated using RMS scale factors over 32 subbands in figure 23. The process can also be used to code PEAK scale factors. The signed differential codes $DRMS_{QL}(j)$, (or $DPEAK_{QL}(j)$) have a maximum range of +/-63 and to reduce their bit rate over the original 6-bit codes, the differen-

tial codes are mapped to a number (p) of 127-level mid-riser variable length code books, each optimal for a different input statistical characteristic. This process is illustrated in figure 24 using the differential log RMS level codes. The differential level codes are mapped to (p) 127-level tables **154** and the total bit usage associated with each table (NB_p) calculated **156**. The table which provides the lowest bit usage over the mapping process is selected **158** using the SHUFF index. The mapped codes are extracted from this table, packed and transmitted to the decoder along with the SHUFF index word. The decoder, which holds the same set of (p) 127-level inverse tables, uses the SHUFF index to direct the incoming variable length codes to the proper table for decoding back to differential quantizer code levels. The differential code levels are returned to absolute using the following routines;

$$RMS_{QL}(1) = DRMS_{QL}(1)$$

$$RMS_{QL}(j) = DRMS_{QL}(j) + RMS_{QL}(j-1) \text{ for } j=2, \ldots K$$

and PEAK differential code levels are returned to absolute using the following routines;

$$PEAK_{QL}(1) = DPEAK_{QL}(1)$$

$$PEAK_{QL}(j) = DPEAK_{QL}(j) + PEAK_{QL}(j-1) \text{ for } j=2, \ldots K$$

where in both cases K = number of active subbands.

Quantization of PMODEs

The prediction mode flags have only two values, on or off, and transmitted to the decoder directly

as 1-bit codes.

Quantization of TMODEs

The transient mode flags have maximum of 4 values, 0, 1, 2 and 3, and are either transmitted to the decoder directly using 2-bit unsigned integer code words or optionally via a 4-level entropy table in an attempt to reduce the average word length of the TMODEs to below 2 bits. Typically the optional entropy coding would be deployed for low-bit rate applications in order to conserve bits.

The entropy coding process **160** is as follows; the transient mode codes TMODE(j) for the j subbands are mapped to a number (p) of 4-level mid-riser variable length code books, each optimal for a different input statistical characteristic. This process is illustrated in figure 25. The TMODE values are mapped to the 4-level tables **162** and the total bit usage associated with each table (NB_p) calculated **164**. The table which provides the lowest bit usage over the mapping process is selected **166** using the THUFF index. The mapped codes, VTMODE(j), are extracted from this table, packed and transmitted to the decoder along with the THUFF index word. The decoder, which holds the same set of 4-level inverse tables, uses the THUFF index to direct the incoming variable length codes, VTMODE(j), to the proper table for decoding back to the TMODE indexes.

Bit Rate Control for Variable Length ADPCM Difference Codes

Since both the side information and differential subband samples can optionally be encoded using entropy variable length code books, some mechanism must be employed to adjust the resulting bit rate of the encoder when the compressed bit stream is to be transmitted at a fixed rate. Since it is not normally desirable to modify the side information once calculated, bit rate adjustments are best achieved by iteratively altering the differential subband sample quantization process within the ADPCM encoder until the rate constraint is met.

In the system described the bit rate which results from the process of mapping the quantizer level codes to the entropy table can be changed by altering the statistical distribution of the level code values. The entropy tables described herein are all assumed to exhibit a similar trend of higher code lengths for higher level code values. In this case the average bit rate reduces as the probability of low value code levels increases and vice-versa. In the ADPCM (or APCM) quantization process, the size of the scale factor determines the distribution, or usage, of the level code values. For example, as the scale factor size increases the differential samples will tend to be quantized by the lower levels and hence the code values will become progressively smaller. This in turn will result in smaller entropy code word lengths and a lower bit rate.

The disadvantage of this method is that by increasing the scale factor size the reconstruction noise in the subband samples is also raised by the same degree. In practice, however, the adjustment of the scale factors is normally no greater than 1dB to 3dB. If a greater adjustment is required

it would be better to return to the bit allocation and reduce the overall bit allocation there rather than risk the possibility of audible quantization noise occurring in subbands which would use the inflated scale factor.

The method of adjusting the Entropy encoded ADPCM bit rate **168** is illustrated in figure 26. First the predictor history samples for each subband are stored out to temporary locations **170** in case the ADPCM coding cycle **172** is to be repeated. Then the subband sample buffers **174** are all encoded normally by the full ADPCM process using prediction coefficients A_H derived from the subband LPC analysis together with scale factors RMS (or PEAK), quantizer bit allocations ABIT, transient modes TMODE, and prediction modes PMODE derived from the estimated difference signal. The resulting quantizer level codes are buffered **176** and mapped **178** to the entropy variable length code book **180** which exhibits the lowest bit usage again using the bit allocation index to determine the code book sizes.

A process of "global rate control" **182** then analyzes the number of bits used for each subband using the same bit allocation index over all index. For example when ABIT=1 the bit allocation calculation in the global bit management could have assumed an average rate of 1.4 per subband sample (i.e. the average rate for the entropy code book assuming optimal level code amplitude distribution). If the total bit usage of all the subbands for which ABIT=1 is greater than 1.4/(total number of subband samples) then the scale factors could be increased throughout all of these subbands to affect a bit rate reduction. Typical nominal word lengths for all the possible entropy ABIT indexes are shown in table 2. Generally though, the decision to adjust **184** subband scale factors is left until all the ABIT index rates have been accessed since those which end out having a bit rate lower

than that assumed in the bit allocation process may compensate for those which are above. This assessment may also be extended to cover all audio channels being used where appropriate.

The recommended procedure for reducing overall bit rate is to start with the lowest ABIT index bit rate which exceeds the threshold and increase the scale factors in each of the subbands which have this bit allocation. The actual bit usage is reduced then by the number of bits these subbands were originally over the nominal rate for that allocation. If the modified bit usage is still in excess of the maximum allowed then the subband scale factors, for the next highest ABIT index for which the bit usage exceeds the nominal, are increased. This process is continued until the modified bit usage is below the maximum.

Once this has been achieved the old history data is loaded into the predictors and the ADPCM encoding process repeated for those subbands which have had their scale factors modified. Following this, the level codes are again mapped to the most optimal entropy code books and the bit usage calculated thereof. If any of the bit usage's still exceed the nominal rates then the scale factors can be further increased and the cycle repeated.

The modification to the scale factors can be done in two ways. The first is to transmit to the decoder an adjustment factor for each ABIT index. For example a 2-bit word could signal an adjustment range of say 0, 1, 2 and 3dB. Since the same adjustment factor is used for all subbands which use the ABIT index, and only indexes 1-10 can use entropy encoding, the maximum number of adjustment factors that need to be transmitted for all subbands is 10. Alternatively, the scale factor can be changed in each subband by selecting a high quantizer level. However, since the scale factor quantizers have step-sizes of 1.25 and 2.5dB respectively the scale factor adjustment is limited to these steps. Moreover, when using this technique the differential encoding of the scale factors and the resulting bit usage may need to be recalculated if entropy encoding of the scale factors is enabled.

Generally speaking the same procedure can also be used to increase the bit rate, i.e. when the bit rate is lower than the desired bit rate. In this case the scale factors would be decreased to force the differential samples to make greater use of the outer quantizer levels and hence use longer code words in the entropy table.

If the bit usage for bit allocation indexes cannot be reduced within a reasonable number of iterations, or in the

case when the scale factor adjustment factors are transmitted, the number of adjustment steps has reached the limit then two remedies are possible. First, scale factors of subbands which are within the nominal rate may be increased, thereby lowering the overall bit rate. Alternatively, the entire ADPCM encoding can be aborted and the adaptive bit allocations across the subbands recalculated, this time using fewer bits.

Table B

Typical nominal word length of entropy code books vs. ABIT as assumed in bit allocation routine and global rate management.

ABIT Index (Entropy)	Nominal Bits per Sample
1	1.4
2	2.1
3	2.5
4	2.8
5	3.2
6	3.6
7	4.0
8	4.4
9	5.2
10	6.0

Table C

Example of procedure for reducing the bit-rate required to code 5.1 channel source material

General rules

- Center channel more important than left and right channels
- Left and right channels more important than surround channels
- First reduce the bit rate needed to code the high frequency bands
- Then reduce the bandwidth

LEFT					RIGHT					CENTER					LEFT SURROUND					RIGHT SURROUND				
3k	8k	12k	15k	20k	3k	8k	12k	15k	20k	3k	8k	12k	15k	20k	3k	8k	12k	15k	20k	3k	8k	12k	15k	20k
N	N	N	N	N	N	N	N	N	N	N	N	N	N	N	N	N	N	N	N	N	N	N	N	N
N	N	N	N	N	N	N	N	N	N	N	N	N	N	N	N	N	N	N	J2	N	N	N	N	J2
N	N	N	N	J2	N	N	N	N	J2	N	N	N	N	N	N	N	N	N	J2	N	N	N	N	J2
N	N	N	N	J2	N	N	N	N	J2	N	N	N	N	N	N	N	N	N	VQ	N	N	N	N	VQ
N	N	N	N	VQ	N	N	N	N	VQ	N	N	N	N	VQ	N	N	N	N	VQ	N	N	N	N	VQ
N	N	N	N	VQ	N	N	N	N	VQ	N	N	N	N	VQ	N	N	N	N	VQ	N	N	N	N	VQ
				J2					J2										J2					J2
N	N	N	N	VQ	N	N	N	N	VQ	N	N	N	N	VQ	N	N	N	N	VQ	N	N	N	N	VQ
				J2					J2										J2					J2
N	N	J2	J2	VQ	N	N	J2	J2	VQ	N	N	N	N	VQ	N	N	J2	J2	VQ	N	N	J2	J2	VQ
				J2					J2										J2					J2
N	N	J2	J2	VQ	N	N	J2	J2	VQ	N	N	N	N	VQ	N	N	J2	J2	VQ	N	N	J2	J2	VQ
				J2					J2										J2					J2
N	N	J2	J2	VQ	N	N	J2	J2	VQ	N	N	N	N	-	N	N	J2	J2		N	N	J2	J2	-
				J2					J2															
N	N	J2	J2		N	N	J2	J2	-	N	N	N	N	-	N	N	J2	J2		N	N	J2	J2	
N	N	J2	J2	-	N	N	J2	J2	-	N	N	N	N	-	N	J2	J2	J2		N	J2	J2	J2	-
N	J2	J2	J2	-	N	J2	J2	J2	-	N	N	N	N	-	N	J2	J2	J2		N	J2	J2	J2	-
N	J2	J2	J2	-	N	J2	J2	J2	-	N	N	N	N		N	J2	J2	VQ		N	J2	J2	VQ	-
																		J2					J2	

Table (continued

	LEFT					RIGHT					CENTER					LEFT SURROUND					RIGHT SURROUND				
	3k	8k	12k	15k	20k	3k	8k	12k	15k	20k	3k	8k	12k	15k	20k	3k	8k	12k	15k	20k	3k	8k	12k	15k	20k
	N	J2	J2	J2	-	N	J2	J2	J2	-	N	N	N	N	-	N	J2	J2	-	-	N	J2	J2	-	-
	N	J2	J2	J2	-	N	J2	J2	J2	-	N	N	N	-	-	N	J2	J2	-	-	N	J2	J2	-	-
	N	J2	J2	VQ J2	-	N	J2	J2	VQ J2	-	N	N	N	-	-	N	J2	J2	-	-	N	J2	J2	-	-
	N	J2	J2	VQ J2	-	N	J2	J2	VQ J2	-	N	N	N	-	-	N	J2	-	-	-	N	J2	-	-	-
	N	J2	J2	VQ J2	-	N	J2	J2	VQ J2	-	N	N	-	-	-	N	J2	-	-	-	N	J2	-	-	-
	N	J2	J2	-	-	N	J2	J2	-	-	N	N	-	-	-	N	J2	-	-	-	N	J2	-	-	-
	N	J2	J2	-	-	N	J2	J2	-	-	N	N	-	-	-	J2	J2	-	-	-	J2	J2	-	-	-
	N	J2	J2	-	-	N	J2	J2	-	-	N	N	-	-	-	J2	-	-	-	-	J2	-	-	-	-
	N	J2	-	-	-	N	J2	-	-	-	N	N	-	-	-	J2	-	-	-	-	J2	-	-	-	-
	N	J2	-	-	-	N	J2	-	-	-	N	-	-	-	-	J2	-	-	-	-	J2	-	-	-	-
	N	-	-	-	-	N	-	-	-	-	N	-	-	-	-	J2	-	-	-	-	J2	-	-	-	-
	J4	-	-	-	-	J4	-	-	-	-	N	-	-	-	-	J4	-	-	-	-	J4	-	-	-	-
	J3	-	-	-	-	J3	-	-	-	-	J3	-	-	-	-	-	-	-	-	-	-	-	-	-	-

N Normal coding
VQ Vector quantization
J2 Joint 2-channel coding (left + right or left surround + right surround)
VQJ2 Vector quantization of joint 2-channel coding
J3 Joint 3-channel coding (left + center + right)
J4 Joint 4-channel coding (left + right +left surround + right surround)
- no coding (zero bit allocation)

The **perceptual analysis** routine generates signal-to-mask ratios, SMR(n), for all 32 subbands within a single audio channel.

The **global bit management** routine acts to manage the bit allocation and coding strategy of all channels in a multi-channel coding scheme. Based on the selected audio mode it determines the number of active subbands (SUBS), allocates bits to these subbands (ABITS), determines the joint frequency strategy (JOINX), determines the number of prediction modes (PMODE), determines the number of transient modes (TMODE), and determines the vector-quantization strategy (VQSUB).

The global bit allocation and management routine iteratively calculates bit allocations ABITS(n) for the subbands within each audio channel, based on the SMR(n).

The first stage of the calculation is to determine the smallest SNR of each subband which is greater than the calculated SMR of the same subband. Based on this value table 1 is used to allocate a bit index ABITS to each subband. This initial bit allocation calculation does not account of any prediction gain. The effect of the prediction gain would be to increase the effective SNR of those subbands where prediction is active, and thereby lower the number of bits allocated to those subbands.

The perceptually calculated local bit allocations can optionally be augmented by fixed minimum and maximum bit allocations in selected subbands. The actual values of the fixed minimum and maximum bit allocations, and the subbands in which they are used, will be determined by the audio mode and target bit rate.

In the event that the sum over all channels of the allocated bits for each subband is greater or less than the target bit-rate, the global bit allocation and management routine will iteratively reduce or increase the bit allocation for individual subbands. The next stages of the bit allocation routine take into account the prediction gain within subbands.

From the subband values, x(n), and estimated subband error signals, ed(n), a prediction gain for each subband can be estimated. This is an estimation of the prediction gain, EPG(n), since it assumes that the quantization error is zero.

```
EPG(n) = 20*log10(x(n)/ed(n))
```

[The actual prediction gain which is obtained in the ADPCM loop will normally be less than or equal to the estimated prediction gain. Generally speaking the reduction in gain gets progressively worse the lower the number of levels required in the quantizer. Approximate prediction error factors PER(ABITS) for each quantizer used are shown in table 2. Using this table it can be seen that high prediction gains are more difficult to maintain in the presence of a coarse quantizer. In other words the actual prediction gain that is achieved using, for example, a 5-level quantizer is approximately 0.7 of the estimated prediction gain, while a 65-level quantizer allows the actual prediction gain to be approximately equal to the estimated prediction gain, PEF = 1.0.]

A mask-to-noise ratio for each subband is calculated which takes into account the SNR, the SMR, and the estimated prediction gain (if PMODE = 1).

MNR(n) = SNR(n) - SMR(n) + (EPG(n)*PEF(ABIT))

In the event that the target bit rate is exceeded by the sum of the local bit allocations the global bit management routine will progessively reduce, iteratively, the local subband bit allocations according to the excess bits indicated for the active subbands, beginning with those subbands which have the greatest number of excess bits. This tends to globally minimise the SMR.

If the target bit rate is still exceeded the global bit management routine will progressively introduce coding strategies that act to reduce the overall coding bit rate. This is an iterative process whereby the total bit rate needed for each coding strategy is re-calculated and compared to the target bit rate. The actual strategies used are dependent on the selected audio mode, the target bit rate, and the intended application. All bit rate reduction strategies follow the general principle of gradually reducing the coding resolution in a graceful manner, with the perceptually least offensive strategy introduced first and the most offensive strategy used last. An example of a strategy for a 5.1 channel consumer audio mode, operating at a target bit-rate of 384 kbits/sec, is shown in table 1. Strategies for other audio modes operating at other bit rates may also be used.

In the event that the target bit rate is less than the sum of the local bit allocations the global bit management routine will progressively increase, iteratively, the local subband bit allocations. This strategy acts to globally maximise the mask-to-noise ratios, (MNR(n)=SNR(n)-SMR(n)), beginning with the most perceptually sensitive subbands. This may cause subbands to be coded which previously have been allocated zero bits. The bit overhead in 'switching on'

subbands in this way may need to reflect the coast in transmitting any predictor coefficients if PMODE is enabled for.

If the coding error in any subband drops below 0.5 LSB, with respect to the source PCM, then no more bits are allocated to that subband. Optionally fixed maximum values of subband bitallocations may be used to limit the maximum number of bits allocated to particular subbands.

The routine calculates EXCESS(n), an estimate of the excess SMR(n) in those subbands where PMODE=1. This is due to the action of predictors operating within subbands which cause the differential subband signals to be smaller than the original subband signal, and hence to require fewer bits for quantization.

Sequence of steps

2 From calculated SMR(n) from perceptual analysis determine smallest SNR(n) which is greater than SMR(n). If SMR(n) <= 0 dB then SNR(n) = 0 dB

3 Obtain ABITS index

4 If PMODE(n) = 1, calculate EPG(n) and obtain factor PEF (ABITS)

5 Calculate EXCESS(n)

If a transient occurs in the perceptual analysis window the local bit allocation routine may not be accurate, due to the frequency smearing effect of the FFT window. Transients are detected and flagged in the local bit allocation routine. One option is to allocate bits on a minimum-mean-squared-error (mmse) basis, using a pro-rata figure for the total bit rate for the subframe. Another option is to halve the length of the perceptual analysis window and conduct the FFT transform twice so as to exclude the transient from one of the analysis windows. The total bit rate for the subframe is

calculated by averaging the local bit allocations calculated from the two perceptual analyses, and then re-allocating them on a mmse basis across all the subbands.

5 Table D

Q [no. of levels]	ABITS index	SNR [dB]	PEF(ABITS)
0	0	0	0.00
3	1	9	0.65
5	2	12	0.70
7	3	15	0.75
9	4	18	0.80
13	5	21	0.85
17	6	24	0.90
25	7	27	0.95
33	8	30	1.00
65	9	36	1.00
129	10	42	1.00
256	11	48	1.00
512	12	54	1.00
1024	13	60	1.00
2048	14	66	1.00
4096	15	72	1.00
8192	16	78	1.00
16384	17	84	1.00
32768	18	90	1.00
65536	19	96	1.00
131072	20	102	1.00
262144	21	108	1.00
524288	22	114	1.00
1048576	23	120	1.00
2097152	24	126	1.00
4194304	25	132	1.00
8388608	26	138	1.00
16777216	27	144	1.00

ADPCM Encoding and Decoding of Subband Signals

The key processes involved in the encoding **186** and decoding **188** of a single subband data stream are illustrated in figures 27 and 28 respectively. Each of the individual processes are described in detail in the preceeding sections and figures.

Hardware Implementation

Figures 29, 30 and 31 describe the basic functional structure of the hardware implementation of a six channel version of the encoder and decoder for operation at 32, 44.1 and 48kHz sampling rates.

Referring to figure 29, Eight Analog Devices ADSP21020 40-bit floating point digital signal processor (DSP) chips **190** are used to implement a six channel digital audio encoder **192**. Six DSPs are used to encode each of the channels while the seventh and eighth are used to implement the "Global Bit Allocation and Management" and "Data Stream Formatter and Error Encoding" functions respectively. Each ADSP21020 is clocked at 33 MHz and utilise external 48bit X 32k program ram (PRAM) **194**, 40bit X 32k data ram (SRAM) **196** to run the algorithms. In the case of the encoders an 8bit X 512k EPROM **198** is also used for storage of fixed constants such as the variable length entropy code books. The data stream formatting DSP uses a Reed Solomon CRC chip **200** to facilitate error detection and protection at the decoder. Communications between the encoder DSPs and the global bit allocation and management is implemented using dual port static RAM **202**.

The encode processing flow is as follows. A 2-channel digital audio PCM data stream **204** is extracted at the output of each of the three AES/EBU digital audio receivers. The first channel of each pair is directed to CH1, 3 and 5 Encoder DSPs respectively while the second channel of each is directed to CH2, 4 and 6 respectively. The PCM samples are read into the DSPs by converting the serial PCM words to parallel (s/p). Each encoder accumulates a frame of PCM samples and proceeds to encode the frame data as described previously. Information regarding the estimated difference signal (ed(n) and the subband samples (x(n)) for each chan-

nel is transmitted to the global bit allocation and management DSP via the dual port RAM. The bit allocation strategies for each encoder are then read back in the same manner. Once the encoding process is complete, the coded data and side information for the six channels is transmitted to the data stream formatter DSP via the global bit allocation and management DSP. At this stage CRC check bytes are generated selectively and added to the encoded data for the purposes of providing error protection at the decoder. Finally the entire data packet **206** is assembled and output.

An overview of the audio mode control interfacing **208** to the encoder DSP implementation is illustrated in figure 30. An additional controller DSP **210** is used to manage the RS232 **212** and key pad **214** control interfaces and relay the audio mode information to both the global bit allocation & management and the data stream formatter DSPs. This allows parameters such as the desired bit rate of the coding system, or the number of channels to be coded, to be dynamically entered via the key pad or from a computer through the RS232 port.

A six channel hardware decoder implementation is described in figure 31. A single Analog Devices ADSP21020 40-bit floating point digital signal processor (DSP) chip **216** is used to implement the six channel digital audio decoder. The ADSP21020 is clocked at 33 MHz and utilise external 48bit X 32k program ram (PRAM) **218**, 40bit X 32k data ram (SRAM) **220** to run the decoding algorithm. An additional 8bit X 512k EPROM **222** is also used for storage of fixed constants such as the variable length entropy and prediction coefficient vector code books.

The decode processing flow is as follows. The compressed data stream **206** is input to the DSP via a serial to parallel converter (s/p) **224**. The data is unpacked and decoded as

illustrated previously. The subband samples are reconstructed into a single PCM data stream for each channel and output to three AES/EBU digital audio transmitter chips **226** via three parallel to serial converters (p/s) **228**.

High Sampling Rate Encoding and Decoding Hardware

Encoding and decoding of high sampling rate (above 48kHz) digital audio is implemented using the same hardware as described in figures 29 and 31 except that the AES/EBU digital audio receivers and transmitters are replaced with synchronous I^2S serial interfaces.

Up to this point, we have described the encoding process of the present invention. The following discussion illustrates the decoding process. A number of common phrases are abbreviated for the purpose of clarity and conciseness.

Abbreviation Description

ABITS	Bit Allocation Index Data Array
AHCRC	Audio Headers CRC Check Word
AMODE	Audio Channel Arrangement
AUDIO	Audio Data Array
AUXCNT	Auxiliary Data Byte Count
AUXD	Auxiliary Data Bytes
BHUF	Bit Allocation Index Quantizer Select
CHIST	Copy History
CHS	Number of audio channels
DCOEFF	Dynamic Range Coefficients
DSYNC	Data Synchronisation Word
DYNF	Embedded Dynamic Range Flag
FILTS	Multirate Interpolator Switch
FTYPE	Frame Type Identifier
FSIZE	Frame Byte Size
HCRC	Header Reed Solomon Check Word
HFLAG	Predictor History Flag Switch
HFREQ	High Frequency Vector Index Data Array
JOINX	Intensity Coding Index
LFE	Low Frequency Effects PCM Data Array
LFF	Low Frequency Effects Flag
MCOEFF	Down Mix Coefficients
MIX	Embedded Down Mix enabled
NBLKS	Number of 32 PCM Sample-Blocks Coded in Current Frame
OCRC	Optional Reed Solomon Check Word
OVER_AUDIO	Oversampled Audio Data Array
PCMR	Source PCM coding Resolution
PMODE	Prediction Mode Array

PSC	Partial sub-subframe Sample Count
PVQ	Prediction Coefficients VQ index Array
RATE	Transmission Bit Rate
SCALES	Subband Scale Factors Data Array
SELxx	SEL5 - SEL129
SEL5	5-level Quantizer Select
SEL7	7/8-level Quantizer Select
SEL9	9-level Quantizer Select
SEL13	13-level Quantizer Select
SEL17	17/16-level Quantizer Select
SEL25	25-level Quantizer Select
SEL33	33/32-level Quantizer Select
SEL65	65/64-level Quantizer Select
SEL129	129/128-level Quantizer Select
SFREQ	Source Sampling Frequency
SHUFF	Scale Factor Quantizer Select
SICRC	Side information CRC Check Word
SSC	Sub-subframe Count
SUBFS	Number of Subframes
SUBS	Subband Activity Count
SUPP	Surplus Sample Count
SYNC	Frame Synchronisation Word
THUFF	Transient Mode Quantizer Select
TIMES	Time Code Stamp
TIME	Embedded Time Stamp Flag
TMODE	Subband Transient Mode Data Array
UNSPEC	Unspecified
VERNUM	Encoder Software Revision No.
VQSUB	High Frequency VQ Band Start Number

1 Introduction

Coherent Acoustics is a universal multichannel audio coding system which has been designed for a wide range of audio applications from professional and high-end consumer, through to home theatre and multimedia.

1.1 Principal Encoding Processes

Coherent Acoustics is essentially a perceptually optimized differential subband coder. By combining differential coding with pyschoacoustically modeled noise mask thresholds operating within narrow subbands, the coding efficiency at very low bit-rates can be enhanced, therby lowering the bit-rate at which subjective transparency is achieved.

A multirate filter-bank is used to split each single audio channel PCM source signal into 32 bands of equal bandwidth. This choice of filter combines the advantages of a high theoretical coding gain, excellent stopband atttentuation and low computational complexity.

Differential coding occurs within each subband, which removes most of the objective redundancy from the audio signal. In parallel pyschoacoustic and transient analyses are performed on the uncoded signal to determine perceptually relevant information. The results are used to modify the main differential coding loop operating on each subband signal. In multichannel formats the bit allocation routine operates over all coded channels, and adapts over time, frequency and channels to optimize audio quality.

1 32-band multirate filterbank
2 differntial coding within each subband
3 transform based pyschoacoustics calculation of noise mask

thresholds
4 sophisticated transient detection
5 adaptive bit allocation
6 multiplexed audio channels
7 error protection schemes
8 data packing and transmission

1.2 Principal decoding processes

After synchronisation the deocder unpacks the compressed audio bit stream, detects and if necessary corrects transmission induced errors, and demultiplexes the data into individual audio channels. The subband differential signals of each audio channel are re-quantized to PCM signals and each audio channel is then inverse filtered to convert the subband signals back to a single time domain signal.

9 buffering snd synchronization of incoming compressed audio data
10 data unpacking
11 error dectection and correction
12 de-multiplexing audio channels
13 re-quantisation of subband signals
14 inverse filtering subband signals back to time domain.

1.3 Features

The specification allows from one to eight channels of compressed audio to be de-multiplexed and decoded from a single data stream. The bit allocation for each multiplexed audio channel from the total data bandwidth, may be fixed or vary dynamically, depending on the demands of the application and the complexity of the encoder.

The total compressed audio data rate can vary from 32 kbps up to 4096 Mbps, depending on the applcation. Constraints would include, for example, the number and quality of the audio channels required, the complexity and latency of the encoding process, the sampling rate of the source PCM digital audio, and the data buffer size at the decoder. Allowed sampling rates vary from 8kHz per channel up to 192kHz per channel, giving audio bandwidths from 3.5 kHz to 90kHz. For applications which used fixed sampling rate DACs interpolation and decimation filters are included in the algorithm to up- and down-sample the PCM audio to the standard 32, 44.1 and 48kHz sampling rates.

15 1 to 8 channels of multiplexed audio
16 Sampling rates from 8 kHz to 192 kHz per channel
17 16-bit to 24-bit word length
18 Compression ratios from 1:1 to 40:1
19 Total data rate operating range from 32 kbits/sec to 4096 kbits/sec
20 Lossless coding mode (variable data rate)
21 Down-mixing from n coded channels to n-1, n-2, n-3 ...etc output channels
22 Down-mixing from 5.1, 4.1 discreet to matrixed stereo L_TR_T
23 Embedded dynamic range control
24 Embedded mix control
25 Sample accurate synchronisation of audio to external video signals

26 Embedded time stamp and user data

1.4 Applications

Coherent Acoustics offers a wide choice of operating modes, and is therfore capable of use in diverse applications. These range from single channel applications operating at low bit-rates, to the most demanding audiophile applcations involving multiple discreet audio channels at high sample resolution and very high sampling rates.

2 Coherent Acoustics Bit Stream Specification

This section describes the format of the Coherent Acoustics bit stream as output by the encoder. The information fields appear in the bit stream in the same order as described below. A typical coherent acoustics data stream **400** comprising 16 audio sub-subframes (4096 PCM samples/ch) is illustrated in FIG. 38.

2.1 Bit Stream Header Information

The header information primarily gives information regarding the construction of the frame, the configuration of the encoder which generated the stream and various optional operational features such as embedded dynamic range control and time code.

DEFINITIONS

V Vital Information - designed to change from frame to frame and hence cannot be averaged over time.

Corruption could lead to failure in decoding process leading to noise on outputs

ACC Corruption of this information could cause decoding failure.

However the settings will ordinarily not change from frame to frame. Hence bit errors could be compensated for by using a majority vote scheme over consecutive frames. If changes are detected then muting should be activated

NV Non-vital information - corruption will degrade audio decoding performance, but will be

graceful.

2.1.1 Frame Synchronisation Word SYNC 32 bits

Sync word = 0x7ffe8001
(0x7ffe8001 + 0x3f for normal frames)

Placed at the beginning of each audio frame. A frame defines the bit stream boundaries in which sufficient information resides to properly decode a block of audio. Except for termination frames the audio frame will always decode either 4096, 2048, 1024, 512 or 256 PCM samples per audio channel. Restrictions exist as to the maximum number of PCM samples per frame against the bit stream bit rate. These are given in table(1) The absolute maximum physical frame size is 65536 bits or 8192 bytes (table 2). Sync words can occur at this, or shorter intervals, depending on the application. The frame byte size is indicated by the FSIZE specifier. Concatenating the sync word with FTYPE and SURP gives an effective word length of 38 bits. For bit synchronisation the unreliability factor will be 1in 1.0E07 attempts.

2.1.2 Frame Type Identifier V FTYPE 1 bit

1 = Normal frame (4096, 2048, 1024, 512 or 256 PCM samples/ch)
0 = Termination frame

Termination frames are used when it is necessary to accurately align the end of an audio sequence with a video frame end point. A termination block carries n*32 audio samples where block length 'n' is adjusted to just exceed the video end point. Two termination frames may be

transmitted sequentially to avoid transmitting one excessively small frame.

2.1.3 Surplus Sample Count V SURP 5 bits

Defines the number of samples by which the termination frame exceeds the original file length defined at the encoder (table 3). This number applies to all channels. These surplus samples may be simply ignored once decoded or they may be 'cross-faded' with the start samples from the next block to produce a smoother transition.

2.1.4 Number of 32 PCM Sample-Blocks Coded in Current Frame per ch V NBLKS 7 bits

Valid Range = 5 - 127
Invalid Range = 0 - 4

NBLKS+1 indicates the number of 32 sample PCM audio blocks per channel encoded in the current frame per channel. The actual encoder audio window size is 32*(NBLKS+1) PCM samples per channel. For normal frames this will indicate a window size of either 4096, 2048, 1024, 512 or 256 samples per channel. For termination frames NBLKS can take any value in its range.

2.1.5 Frame Byte Size V FSIZE 14 bits

0 - 94 = Invalid
95 - 8191 = Valid range - 1 (ie. 96 bytes to 8192 bytes)
8192 - 16383 = Invalid

FSIZE defines the byte size of the current audio frame. Where the data rate and sampling rate are indivisible the byte size will vary by 1 from block to block to produce a time average.

2.1.6 Audio Channel Arrangement ACC AMODE 6 bits

0b000000 = 1-ch A
0b000001 = 2-ch A + B (dual mono)
0b000010 = 2-ch L + R (stereo)
0b000011 = 2-ch (L+R) + (L-R) (sum-difference)
0b000100 = 2-ch Lt + Rt (total)
0b000101 = 3-ch L + R + C
0b000110 = 3-ch L + R + S
0b000111 = 4-ch L + R + C + S
0b001000 = 4-ch L + R + SL + SR
0b001001 = 5-ch L + R + C + SL + SR
0b001010 = 6-ch L + R + CL + CR + SL + SR
0b001011 = 6-ch Lf + Rf + Cf + Cr + Lr + Rr
0b001100 = 7-ch L + CL + C + CR + R + SL + SR
0b001101 = 8-ch L + CL + CR + R + SL1 + SL2 + SR1 + SR2
0b001110 = 8-ch L + CL + C+ CR + R + SL + S + SR
0b001111 - 0b110000 = User defined codes
0b110001 - 0b111111 = Invalid

The channel arrangement describes the number of audio channels and the audio playback mode. Unspecified modes may be defined at a later date (user defined code) and the control data required to implement them, ie channel assignments, down mixing etc, can be input to the decoder locally.

2.1.7 Source Sampling Frequency ACC SFREQ 4 bits

0b0000 = Invalid
0b0001 = 8kHz
0b0010 = 16kHz
0b0011 = 32kHz
0b0100 = 64kHz
0b0101 = 128kHz

0b0110 = 11.025kHz
0b0111 = 22.05kHz
0b1000 = 44.01kHz
0b1001 = 88.02kHz
0b1010 = 176.4kHz
0b1011 = 12kHz
0b1100 = 24kHz
0b1101 = 48kHz
0b1110 = 96kHz
0b1111 = 192kHz

This specifies the source sampling frequency. If the decoder is unable to make use of the over sampled data this may be discarded and the baseband audio converted normally using a standard sampling rate (32,44.1 or 48k). If the decoder is receiving data coded at sampling rates lower than that available at playback then sample interpolation (2X or 4X) will be required (tables 4, 5).

2.1.8 Transmission Bit Rate ACC RATE 5 bits

0b00000 = 32kbps
0b00001 = 56kbps
0b00010 = 64kbps
0b00011 = 96kbps
0b00100 = 112kbps
0b00101 = 128kbps
0b00110 = 192kbps
0b00111 = 224kbps
0b01000 = 256kbps
0b01001 = 320kbps
0b01010 = 384kbps
0b01011 = 448kbps
0b01100 = 512kbps
0b01101 = 576kbps
0b01110 = 640kbps

0b01111 = 768kbps
0b10000 = 896kbps
0b10001 = 1024kbps
0b10010 = 1152kbps
0b10011 = 1280kbps
0b10100 = 1344kbps
0b10101 = 1408kbps
0b10110 = 1411.2kbps
0b10111 = 1472kbps
0b11000 = 1536kbps
0b11001 = 1920kbps
0b11010 = 2048kbps
0b11011 = 3072kbps
0b11100 = 3840kbps
0b11101 = 4096kbps
0b11110 = Variable
0b11111 = Lossless

RATE specifies the average data rate for the current audio frame. Variable and lossless modes imply that the data rate changes from frame to frame.

2.1.9 Embedded Down Mix enabled V MIX 1 bit

0 = mix parameters not present
1 = CHS*2 mix parameters present (8-bits each)

This indicates if embedded down mixing coefficients are included at the end of the header (see "optional header information")

2.1.10 Embedded Dynamic Range Flag V DYNF 2 bits

0 = dynamic range parameters not present

1 = 1 set of range parameters are present a id are valid for entire block
2 = 2 sets of range parameters present and are valid for each 1/2 block
3 = 4 sets of range parameters are present and are valid for each 1/4 block

This indicates if embedded dynamic range coefficients are included at the end of the header (see "optional header information")

2.1.11 Embedded Time Stamp Flag V TIME 1 bit

0 = time stamp not present
1 = present

This indicates if an embedded time stamp is included at the end of the header (see "optional header information")

2.1.12 Auxiliary Data Byte Count V AUXCNT 6 bit

0 = no bytes present
1- 63 = number of bytes-1

This indicates if embedded auxiliary data bytes are included at the end of the header (see "optional header information")

2.1.13 Low Frequency Effects Flag V LFF 1 bit

0 = No effects channel present
1 = Effects channel present

This indicates if low frequency effects audio data is

included in the audio subframes

2.1.14 Predictor History Flag Switch NV HFLAG 1 bit

0 = Reconstructed history from previous frame is ignored in generating predictions for current frame.
1 = Reconstructed history from previous frame is used as normal.

If frames are to be used as possible entry points into the data stream or as audio sequence "start frames" the predictor history may not be contiguous. Hence these frames can be coded without the previous frame predictor history, ensuring a faster ramp-up on entry.

2.1.16 Header Reed Solomon Check Word HCRC 8 bits X2

2.1.17 Multirate Interpolator Switch NV FILTS 1 bit

0 = Non perfect reconstructing
1 = Perfect Reconstructing

Indicates which set of 32-band interpolation FIR coefficients are to be used to reconstruct the subband audio.

2.1.18 Encoder Software Revision No. ACC VERNUM 4 bits

0 - 6 = Future revision which will be compatible with this specification

7 = Current
8 - 15 = Future revision which is incompatible with this specification

2.1.19 Copy History NV CHIST 2 bits

0x00 = Copy Prohibited
0x01 = First Generation
0x10 = Second Generation
0x11 = Original Material

Indicates the generation history of the audio material within the bit stream.

2.1.20 Source PCM coding Resolution NV PCMR 3 bits

0x000 = 16 bits
0x001 = 18 bits
0x010 = 20 bits
0x011 = 21 bits
0x100 = 22 bits
0x101 = 23 bits
0x110 = 24 bits
0x111 = INVALID

Indicates the PCM resolution of the encoded source digital audio samples.

2.1.21 Unspecified NV UNSPEC 6 bits

This header is presently unspecified.

2.2 Coherent Acoustics Optional Header Information

2.2.1 Time Code Stamp ACC TIMES 32 bits

2.2.2 Down Mix Coefficients V MCOEFF 8bit*CHS*2

2.2.3 Dynamic Range Coefficients V DCOEFF 8bit*CHS*no. of sets

2.2.4 Auxiliary Data Bytes NV AUXD 8bit*AUXCT

2.2.5 Optional Reed Solomon Check Word OCRC 8 bits X 2

Optional check bytes will be inserted only if mix, or dynamic range coefficients are present.

2.3 Coherent Acoustics Audio Coding Header

The audio coding headers indicate the packing arrangement and coding formats used at the encoder to assemble the coding 'side information' ie bit allocations, scale factors etc. Many of the headers are repeated for each audio channel.

2.3.1 Number of Subframes SUBFS 4 bits

One SUBFS index is transmitted per audio frame. The index indicates (table 6) the number of discreet data blocks or audio subframes contained within the main audio frame. Each subframe may be decoded independent from any other subframe. SUBS is valid for all audio channels (CHS).

2.3.2 Number of audio channels CHS 3 bits

A single CHS index is transmitted to indicate the number of separate audio channels for which data may be found in the current audio frame (table 7).

2.3.3 Subband Activity Count SUBS 5 bits X CHS

A SUBS index is transmitted for each audio channel. The index indicates the number of active subbands in each audio channel by using table(8). Samples in subbands located above SUBS are reset prior to computing the 32-band interpolation filter, provided that intensity coding in that band is disabled. SUBS are not transmitted if SFREQ is greater than 48kHz.

2.3.4 High Frequency VQ Band Start Number VQSUB

4 bits X CHS

A VQSUB index is transmitted for each audio channel. The index indicates the starting subband number (table 9) for which high frequency vector quantizer code book addresses are present in the data packets. VQSUBS are not transmitted if SFREQ is greater than 48kHz. VQSUBS should be ignored for any audio channel using intensity coding.

2.3.5 Intensity Coding Index JOINX
3 bit X CHS

An intensity coding index is transmitted for each audio channel. The index indicates (table 10) if joint intensity coding is enabled and which audio channels carry the joint audio data. If enabled, the SUBS index changes to indicate the first subband from which intensity coding begins (table 11). Intensity coding will not be enabled if SFREQ is greater than 48kHz.

2.3.6 Transient Mode Quantizer Select THUFF
2 bits X CHS

A THUFF index is transmitted for each audio channel. The index selects (table 12) either 4-level Huffman or fixed 4-level (2-bit) inverse quantizers for decoding the transient mode data.

2.3.7 Scale Factor Quantizer Select SHUFF
3 bits X CHS

A SHUFF index is transmitted for each audio channel. The index selects (table 13) either 129-level Huffman, fixed 64-level (6-bit), or fixed 128-level (7-bit) inverse quantizers for decoding the scale factor data.

2.3.8 Bit Allocation Index Quantizer Select BHUFF
3 bits X CHS

A BHUFF index is transmitted for each audio channel. The index selects (table 14) either 13-level Huffman, fixed 16-level (4-bit), or fixed 32-level (5-bit) inverse quantizers for decoding the bit allocation indexes.

2.3.9 5-level Quantizer Select S E L 5
1 bit X CHS

A SEL5 index is transmitted for each audio channel. The index indicates (table 15) which 5-level inverse Huffman quantizer will be used to decode audio codes which have a bit allocation index of 2.

2.3.10 7/8-level Quantizer Select S E L 7
2 bits X CHS

A SEL7 index is transmitted for each audio channel. The index indicates (table 16) which 7-level inverse Huffman quantizer will be used to decode audio codes which have a bit allocation index of 3. When SEL7=3 an 8-level (3-bit) fixed rate quantizer is used.

2.3.11 9-level Quantizer Select SEL9
2 bits X CHS

A SEL9 index is transmitted for each audio channel. The index indicates (table 17) which 9-level inverse Huffman quantizer will be used to decode audio codes which have a bit allocation index of 4.

2.3.12 13-level Quantizer Select S E L 1 3
2 bits X CHS

A SEL13 index is transmitted for each audio channel. The index indicates (table 18) which 13-level inverse Huffman quantizer will be used to decode audio codes which have a bit allocation index of 5.

2.3.13 17/16-level Quantizer Select SEL17
3 bits X CHS

A SEL17 index is transmitted for each audio channel. The index indicates (table 19) which 17-level inverse Huffman quantizer will be used to decode audio codes which have a bit allocation index of 6. When SEL17=7 a 16-level (4-bit) fixed rate quantizer is used.

2.3.14 25-level Quantizer Select SEL25
3 bits X CHS

A SEL25 index is transmitted for each audio channel. The index indicates (table 20) which 25-level inverse Huffman quantizer will be used to decode audio codes which have a bit allocation index of 7.

2.3.15 33/32-level Quantizer Select SEL33
3 bits X CHS

A SEL33 index is transmitted for each audio channel. The index indicates (table 21) which 33-level inverse Huffman quantizer will be used to decode audio codes which have a bit allocation index of 8. When SEL33=7 a 32-level (5-bit) fixed rate quantizer is used.

2.3.16 65/64-level Quantizer Select SEL65
3 bits X CHS

A SEL65 index is transmitted for each audio channel. The index indicates (table 22) which 65-level inverse Huffman

quantizer will be used to decode audio codes which have a bit allocation index of 9. When SEL65=7 a 64-level (6-bit) fixed rate quantizer is used.

2.3.17 129/128-level Quantizer Select SEL129
3 bits X CHS

A SEL129 index is transmitted for each audio channel. The index indicates (table 23) which 129-level inverse Huffman quantizer will be used to decode audio codes which have a bit allocation index of 10. When SEL129=7 a 128-level (7-bit) fixed rate quantizer is used.

2.3.18 Audio Headers CRC Check Word AHCRC
8 bits X 2

Optional Reed Solomon check bytes to verify audio header validity.

2.4 Coherent Acoustics Audio Subframes

The remainder of the frame is made up of SUBFS consecutive audio subframes. Each subframe begins with the audio coding side information, followed by the audio data itself Each subframe is terminated with unpacking verificatio n/synchronisation bytes. Audio subframes are decoded entirely without reference to any other subframe.

2.5 Audio Coding Side Information

The audio coding side relays information regarding a number of key encoding systems used to compress the audio. These include transient detection, predictive coding, adaptive bit allocation, high frequency vector quantization, intensity coding and adaptive scaling. Much of this data is unpacked from the data stream using the audio coding header information above.

2.5.1 Sub-subframe Count SSC 2 bits

Indicates the number of 256 sample blocks (sub subframes) represented in the current audio subframe per channel (table 24). The maximum sub-subframe count is 4 and the minimum 1. For a 32 band filter this gives either 1024, 512, 256 or 128 samples per subframe per audio channel. The SSC is valid for all audio channels.

2.5.2 Partial sub-subframe Sample Count PSC 3 bits

Indicates the number of subband samples in a partial sub-subframe (ie the SSCth+1) (table 25). Normally PSC will be 0, ie a partial sub-subframe does not exist. Partial sub-

subframes frames will only exist in termination frames, (PSC is always 0 when SSC=4, ie subframe size cannot exceed 1024 samples). The PSC is valid for all audio channels.

2.5.3 Prediction Mode Array PMODE

Ordered as 1 bit per subband per channel, starting at subband 1 of channel 1 through to subband SUBS of channel 1 and repeating for CHS channels. When PMODE=1 then prediction mode is active, and prediction mode is inactive when PMODE=0. The SUBS indicates the last subband for the PMODES, in both non-intensity and intensity coding modes.

2.5.4 Prediction Coefficients VQ index Array PVQ

A 12-bit prediction coefficient vector index will exist for each subband for which PMODE is active starting from subband 1 in channel 1 through to subband SUBS, and repeating for remaining channels. The predictor coefficients themselves are obtained by applying the index to the vector code book in table(26). The predictor coefficients are valid for the current subframe. If PMODE = 0 the predictor coefficients are held in reset.

2.5.5 Bit Allocation Index Data Array ABITS

This array is decoded using a Huffman/linear inverse quantizer as indicated by indexes BHUFF. Bit allocation indexes are not transmitted for subbands which are encoded using the high frequency vector quantizer or for subbands which are intensity coded. The index ordering begins with subband 1, channel 1, through to the last active subband of CHS channel.

2.5.6 Subband Transient Mode Data Array TMODE

This array does not exist if only one sub-subframe resides in the subframe (SSC). TMODES are decoded using a Huffma n/linear inverse quantizer as indicated by indexes THUFF. TMODE data is not transmitted for subbands which are encoded using the high frequency vector quantizer. The array is ordered audio channel 1 to channel CHS. The transient modes are valid for the current sub-frame.

2.5.7 Subband Scale Factor Data Array SCALES

This array is decoded using a Huffman/linear inverse quantizer as indicated by indexes SHUFF. If Huffman inverse quantization is indicated the scale data is differentially encoded and must be converted to absolute by adding the current value to previous sum. Scale factors are then converted to rms values using the 6-bit or 7-bit look up tables (tables 27,28). In any subband a single scale factor is transmitted when the corresponding tmode=0. Otherwise two scale factors are transmitted.

2.5.8 Side information CRC Check Word SICRC
8 bits X 2

The validity of the subframe side information beginning from SSC can be optionally verified using the Reed Solomon check bytes SICRC.

2.6 Audio Data Arrays

2.6.1 High Frequency Vector Index Data Array HFREQ

This array consists of 10-bit indexes per high frequency subband indicated by VQSUB indexes. 32 audio samples are obtained by mapping each 10-bit index to the high frequency code book (table 29).

2.6.2 Low Frequency Effects PCM Data Array LFE

This array is not present if LFF=0. Comprises a number of 8-bit effect samples plus one 7-bit scale factor. The number of effects bytes present in LFE is given by SSC*2 when PSC=0 or (SSC+1)*2 when PSC is non zero.

2.6.3 Audio Data Array AUDIO

The audio array is decoded using Huffman/fixed inverse quantizers as indicted by indexes ABITS (table 30) and in conjunction with SEL indexes when ABITS are less than 11, (tables 15,16,17,18,19,20,21,22,23) . This array is divided into a number of sub-subframes (SSC), each decoding up to 256 PCM samples per audio channel. The audio codes are ordered by bit allocation index and channel number, unlike all previous arrays.

2.6.4 Oversampled Audio Data Array OVER_AUDIO

This array is only present if SFREQ is greater than 48kHz. The first 2 bytes of the array indicates the total number of bytes present in the data array. The decoding specification for the oversampled audio will be defined in future revisions. To remain compatible, decoders which cannot

operate a: .ling rates above 48kHz should skip this audio data array.

2.6.5 Data Synchronisation Word DSYNC 16 bits

DSYNC=0xffff

Used to verify end of subframe position in audio frame. If the position does not verify, the audio decoded in the subframe is declared unreliable.

3 Coherent Acoustics Decoding Procedure

FIG.s 32 and 33 are a block diagram of the subband sample decoder **402** and a flowchart **404** illustrating the coherent acoustics process, respectively. Chapter 3 describes the decoding process depicted in FIG.s 32 and 33.

3.1 Receive Audio Frame and unpack Headers

The coded data stream is packed (or framed) at the encoder and includes in each frame additional data for decoder synchronisation, error detection and correction, audio coding status flags and coding side information, apart from the actual audio codes themselves.

3.1.1 Find Sync

[sync]

The coded bit stream consists of consecutive audio frames, each beginning with a 32-bit (0x7ffe8001) synchronisation word (SYNC). Since the frame type will almost always be normal (FTYPE=1 and SURP=0x1f) the sync word may be reliably concatenated with 0x3f increasing the effective sync word size to 38 bits. To compensate for bit errors the position of SYNC may be averaged with previous frames or it may be verified using the Reed Solomon check word HCRC.

3.1.2 Determine size of Data Frame

[fs

Once SYNC has been detected the physical size of the audio frame, FSIZE is extracted from the bytes following the sync word. This allows the programmer to set an 'end of frame'

timer to reduce software overheads. The actual frame size may vary from frame to frame, for example in the case when Fs=44.1. However to enable practical buffer management, certain limitations exist as to the maximum number of bytes that is to be expected in any given audio frame for fixed rate coding as shown in tables(1, 2). For example, for audio encoded at 48kHz sampling, with a bit rate of 384kbps, the largest audio window at the encoder is 4096 samples, giving a maximum transmitted frame size of approximately 5.3k bytes, irrespective of the number of audio channels being coded. The 'worst case' frame size is always 8k bytes for 8,16,32,64,128kHz sampling modes. This limit does not apply for the variable or lossless coding modes since due to the burst nature of the input data, on-chip buffering would prove impractical in any case.

3.1.3 Verify Validity of Audio frame Headers

[sync,ftype,surp,nblks,fsize,amode,sfreq,rate,mixt, dynf,dynct,time,auxcnt,lff,hflag]

As soon as the frame header bytes have been received (or the entire audio frame) the validity of the first 12 bytes may checked using the Reed Solomon check bytes,HCRC. These will correct 1 erroneous byte out of the 14 bytes or flag 2 erroneous bytes. After error checking is complete the header information is used to update the decoder flags.

3.1.4 Extract Non-critical frame Headers

[filts,vernum,chist,pcmr,unspec]

The headers following HCRC and up to the optional information, may be extracted and used to update the decoder flags. Since this information will not change from frame to frame a majority vote scheme may be used to compensate for

bit errors.

3.1.5 Extract optional headers

[times,mcoeff,dcoeff,auxd,ocrc]

The optional header data is extracted according to mixc t,dynf,time and auxcnt headers. The optional data may be verified using the optional Reed Solomon check bytes OCRC.

3.1.6 Extract and verify audio coding frame headers

[subfs, subs,chs,vqsub,joinx,thuff,shuff,bhuff, sel5,sel7,sel9,sel13,sel17,sel25,sel33,sel65,sel129, ahcrc]

The audio coding frame headers are transmitted once in every frame. They may be verified using the audi Reed Solomon check bytes AHCRC. Most headers are repeated for each audio channel as defined by CHS.

3.2 Unpack Subframe Coding Side Information

The audio coding frame is divided into a numb r of subframes (SUBFS). The number of PCM samples repre ented in each subframe is given by ((SSC+1)*256)+(PSC 32). All the necessary side information (pmode,pvq,tmo e,scales,abit s,hfreq) is included to properly decode ea h subframe of audio without reference to any other subframe.

3.2.1 Unpack Prediction Modes

[pmodes]

A 1-bit prediction mode (PMODE) flag is transmitted for every active subband (SUBS) and across all audio channel (CHS). The PMODE flags are valid for the current subframe. PMODE=0 implies that the predictor coefficients are not included in the audio frame for that subband. In this case the predictor coefficients in this band are reset to zero for the duration of the subframe. PMODE=1 implies that the side information contains predictor coefficients for this subband. In this case the predictor coefficients are extracted and installed in its predictor for the duration of the subframe.

The pmodes are packed, starting with audio channel 1, in ascending subband number up to SUBS specifier, followed by those from channel 2 etc.

3.2.2 Unpack Prediction VQ index array

[pvq]

The predictors used in Coherent Acoustics are all-pole 4th order linear. The predictor coefficients are encoded using a 12-bit 4-element vector quantizer. In order to reconstruct the coefficients at the decoder an identical 4096 X 4 vector look-up table is stored at the decoder. The coefficients address information is hence transmitted to the decoder as indexes (PVQ). The predictor coefficients are valid for the entire subframe.

For every PMODE=1 in the pmode array a corresponding prediction coefficient VQ address index is located in array PVQ. The indexes are fixed unsigned 12-bit integer words and the 4 prediction coefficients are extracted from the look-up table (table 26) by mapping the 12-bit integer to the vector table. The ordering of the 12-bit indexes

matches that of the pmodes.

In table(26) the coefficients are stored as 16-bit signed factional (Q13) binary.

3.2.3 Unpack Bit allocation index array

[abits]

The bit allocation indexes (ABITS) indicate the number of levels in the inverse quantizer which will convert the subband audio codes back to absolute values.

ABITS are transmitted for each subband subframe, starting at the first and stopping at the SUBS or VQSUB subband limit, which ever is smaller. The unpacking format differs for the ABITS in each audio channel, depending on the BHUFF index. The ABITS are packed, starting with audio channel 1, in ascending subband number up to the SUBS/VQSUB limit, followed by those from channel 2, and so on.

For intensity coded audio channels ABIT indexes are transmitted only for subbands up to the SUBS limit.

BHUFF=6

In this mode the ABITS indexes are packed as fixed 5-bit unsigned integers, giving a range of indexes between 0-31.

BHUFF=5

In this mode the ABITS indexes are packed as fixed 4-bit unsigned integers, giving a range of indexes between 0-15.

BHUFF= 4 - 0

In this mode the ABITS indexes are unpacked using a choice of five 13-level unsigned Huffman inverse quantizers (table 14) giving a range of indexes between 0-12.

3.2.4 Unpack Subband Transient Mode array

[tmode]

The transient mode side information (TMODE) is used to indicate the position of transients in each subband with respect to the subframe. Each subframe is divided into 1 to 4 sub-subframes. In terms of subband samples each sub-subframe consists of 8 samples. The maximum subframe size is 32 subband samples. If a transient occurs in the first sub-subframe then tmode=0. A transient **406** in the second sub-subframe is indicated when tmode=1, and so on, as shown in fig(34). To control transient distortion such as pre-echo two scale factors are transmitted for subframe subbands where TMODE is greater then 0. The first scale factor **408** is used to scale the subband audio in the sub-subframes up to the one which contains the transient. The second scale factor **410** is used to scale the subband audio in the sub-subframe which contains the transient and in any following sub-subframes (fig 34).

Figs(35, 36) describe the transient strategies **412** and **414** for 3 and 2 sub-subframes, respectively.

However, if only one sub-subframe exists in the current subframe (SSC=0) then no TMODEs are transmitted for any of the audio channels. This is because the position of transients in a single sub-subframe need not be resolved and TMODEs can be assumed to be zero. Hence, when SSC=0, a single scale factor will exist per subband up to the normal

SUBS limit.

For non-intensity coded channels, TMODE indexes are not transmitted for subbands which use high frequency vector quantization (VQSUB), subbands in which the subframe bit allocation index is zero, or for subbands beyond the SUBS limit. In the case of VQSUB subbands the TMODE indexes default to zero.

For intensity coded channels where SUBS is used to indicate the first joined subband, even though bit allocation indexes do not exist above SUBS, tmodes are still transmitted for subbands above the SUBS limit. The actual number of subbands for which tmodes are transmitted in intensity coded channels is the same as that in the source audio channel, ie use the SUBS for the audio channel indicated by the JOINX.

The THUFF indexes extracted from the audio headers determine the method required to decode the TMODEs as shown in table (12). When THUFF=3 the TMODEs are unpacked as un-signed 2-bit integers. When THUFF is any other value then they are decoded using a choice of three 4-level Huffman inverse quantizers (table 12).

The tmodes are packed, starting with audio channel 1, in ascending subband number, followed by those from channel 2, and so on.

3.2.5 Unpack Subband scale factor array

[scales]

Scale factor indexes are transmitted to allow for the proper scaling of the subband audio codes within each subframe. If TMODE is equal to zero (or defaults to zero, as is the case

with VQSUBS subbands) then one scale factor is transmitted. If TMODE is greater than zero for any subband, then two scale factors are transmitted together.

For non-intensity coded channels, scale factors are always transmitted except for subbands beyond the SUBS limit, or for subbands in which the subframe bit allocation index is zero.

For intensity coded channels, scale factors are transmitted up to the SUBS limit of the source channel given in JOINX.

The SHUFF indexes extracted from the audio headers determine the method required to decode the SCALES for each separate audio channel, as shown in table(13).

The scale indexes are packed, starting with audio channel 1, in ascending subband number, followed by those from channel 2, and so on.

SHUFF=6

SCALES indexes are unpacked for this channel as un-signed 7-bit integers. The indexes are converted to rms by mapping to table(28). At 127 levels, the resolution of the scale factors is 1.25dB and the dynamic range 158dB. The rms values are unsigned 20-bit fractional binary, scaled with 4 different Q factors depending on the magnitude.

SHUFF=5

SCALES indexes are unpacked for this channel as un-signed 6-bit integers. The indexes are converted to rms by mapping to table(27). At 63 levels, the resolution of the scale factors is 2.25dB and the dynamic range 141dB. The rms values are unsigned 20-bit fractional binary, scaled with 4

different Q factors depending on the magnitude.

SHUFF= 4 - 0

SCALES indexes are unpacked for this channel using a choice of five 129-level signed Huffman inverse quantizers (table 13). The resulting inverse quantized indexes are, however, differentially encoded and are converted to absolute as follows;

ABS_SCALE(n+1)=SCALES(n)-SCALES(n+1) where n is the nth differential scale factor in the audio channel starting from the first subband.

Note, the first differential scale factor (n=1) for each channel is copied directly into the absolute array, and subbands for which there is no scale index are dropped from the calculation . The absolute indexes are then converted to rms by mapping to table(27). At 63 levels, the resolution of the scales factors is 2.25dB and the dynamic range 141dB. The rms values are unsigned 20-bit fractional binary, scaled with 4 different Q factors depending on the magnitude.

3.2.6 Verify Subframe side information with SICRC Check bytes

The validity of the subframe side information data beginning from SSC can be optionally verified using the extracted Reed Solomon check bytes SICRC. This check is only practical when the side information is linearly encoded ie Huffman quantizers are not used. This is normally the case for high bit-rate coding modes.

3.2.7 Unpack high frequency VQ index array

[hfreq]

At low bit-rate audio coding modes, Coherent Acoustics uses vector quantization to efficiently encode high frequency subband audio samples directly. No differential encoding is used in these subbands and all arrays relating to the normal ADPCM processes must be held in reset. The first subband which is encoded using VQ is indicated by VQSUB (table 9) and all subbands up to SUBS are also encoded in this way. The VQSUB index is meaningless when the audio channel is using intensity coding (JOINX).

The encoder uses a 10-bit 32-element vector look-up table. Hence to represent 32 subband samples a 10-bit address index is transmitted to the decoder. Using an identical look-up table at the decoder the same 32 samples are extracted by mapping the index to the table. Only one index is transmitted for each subband per subframe. If a termination frame (FTYPE) is flagged and the current subframe is less than 32 subband samples (PSC) then the surplus samples included in the vector should be ignored.

The high frequency indexes (HFREQ) are unpacked as fixed 10-bit unsigned integers. The 32 samples required for each subband subframe are extracted from table(29) by applying the appropriate indexes. This is repeated for each channel in which the high frequency VQ mode is active.

The high frequency indexes are packed starting with the lowest audio channel for which VQSUBS is active and in ascending subbands, followed by those from the next active channel, and so on.

3.2.8 Unpack Low frequency Effects PCM array

[lfe]

The decimation factor for the effects channel is always X128. The number of 8-bit effect samples present in LFE is given by SSC*2 when PSC=0 or (SSC+1)*2 when PSC is non zero. An additional 7-bit scale factor (unsigned integer) is also included at the end of the LFE array and this is converted to rms using table (28).

3.3 Unpack Audio codes array

[audio]

The extraction process for the subband audio codes is driven by the ABITS indexes and, in the case when ABITS<11, the SEL indexes also. The audio codes are formatted either using variable length Huffman codes or fixed linear codes. Generally ABITS indexes of 10 or less will imply a Huffman variable length codes, while ABITS above 10 always signify fixed codes (table 30). All quantizers have a mid-tread, uniform characteristic. For the fixed code (Y^2) quantizers the most negative level is dropped.

The audio codes, unlike the side information prior to it, is ordered by ABITS index value, starting with the ABITS=1. For example, starting with the first subband where ABITS=1 in the first audio channel, these codes are packed with those from the next subband with an ABITS index of 1, and so on, moving up through all the subbands and on to the remaining audio channels. This packing procedure is repeated for all subbands with ABITS=2 in all channels (if they exist) etc. ABITS indexes which are not used are skipped in the procedure.

Another difference from the side information packing order is that the audio codes are packed into sub-subframes, each representing a maximum of 8 subband samples, and these sub-

subframes are repeated up to four times in the current subframe. Hence the above unpacking procedure must be repeated SSC times in each subframe. The reason for packing the audio in this way is to allow a single sub-subframe to be unpacked and decoded without having to unpack the entire subframe. This reduces the computational overhead when using a sub-subframe size output buffer (256 samples per channel).

In the case of termination frame where PSC is non zero, the unpacking is repeated a further time, except that the number of codes for each subband is now equal to PSC. In this case also, the ABITS indexes are reused from the previous sub-sub frame.

3.3.1 Unpack oversampled Audio codes array

[over_audio]

If the sampling rate flag (SFREQ) indicates a rate higher than 48kHz then the over_audio data array will exist in the audio frame. The first two bytes in this array will indicate the byte size of over_audio. The oversampling audio decoding specification is currently being finalised and will be the subject of future drafts. Presently this array should be ignored and the base-band audio decoded as normal. Further, the sampling rate of the decoder hardware should be set to operate at SFREQ/2 or SFREQ/4 depending on the oversampling rate.

3.4 Unpack Synchronisation Check

[dsync]

A data unpacking synchronisation check word DSYNC=0xffff is included at the end of every subframe to allow the unpacking

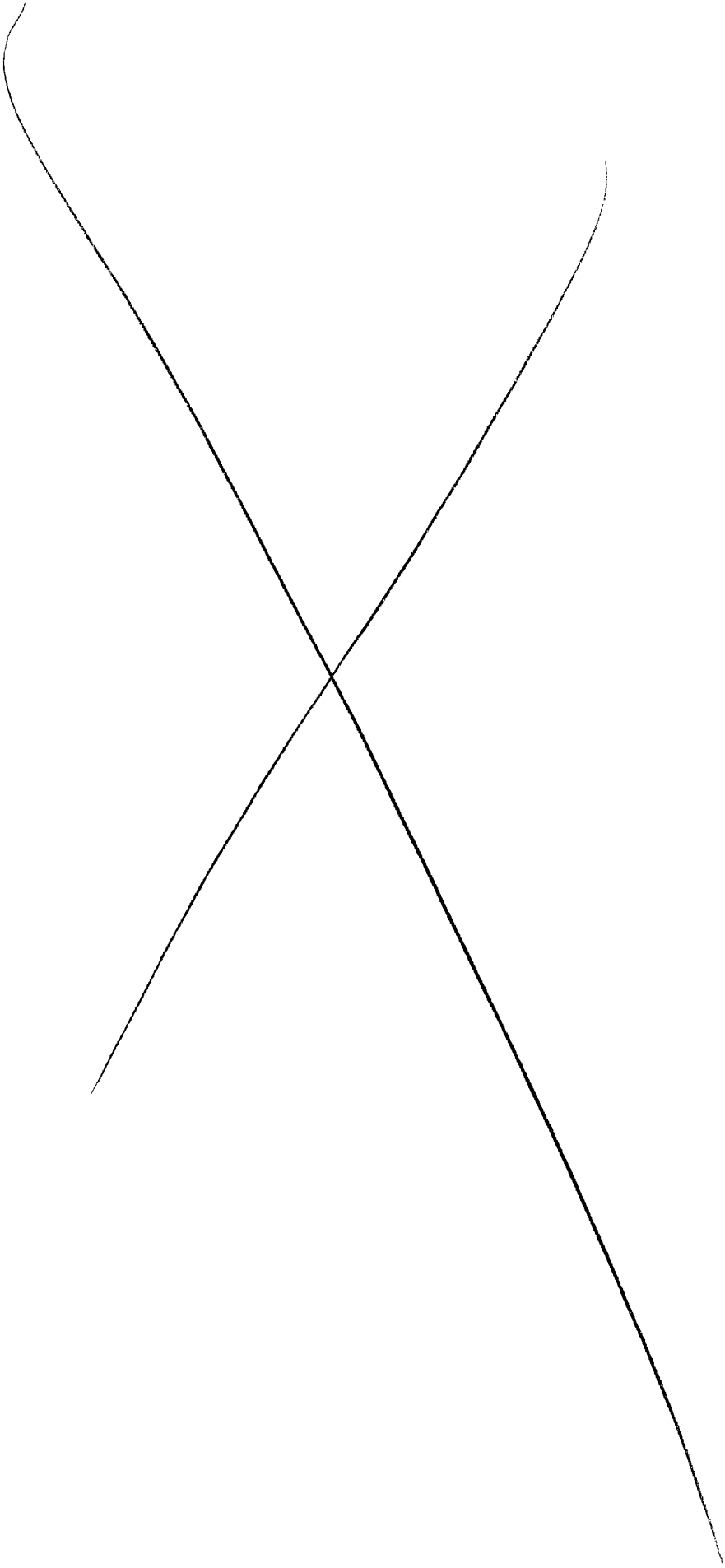

integrity to be verified. The use of variable code words in the side information and audio codes, as is the case for low audio bit rates, can lead to unpacking mis-alignment if either the headers, side information or audio arrays have been corrupted with bit errors. If the unpacking pointer does not point to the start of DSYNC then it can be assumed the previous subframe audio is unreliable. If the headers and side information are known to be error free, the unpacking of the next subframe should begin from the first bit following DSYNC.

3.5 Inverse Quantize High Frequency Vectors

The extracted high frequency samples are signed 8-bit fractional (Q4) binary (table). These are scaled using the scale factors (SCALES) associated with these subbands.

3.6 Inverse Quantize Audio Codes

Before entering the ADPCM loop the audio codes are inverse quantized and scaled to produce reconstructed subband difference samples.

The inverse quantization is achieved by mapping the code words to the inverse quantizer look-up table specified by ABITS and SEL. Although the codes are ordered by ABITS, each separate audio channel will have a separate SEL specifier. The look-up process results in a signed quantizer level number which can be converted to unit rms by multiplying with the quantizer step-size (tables 31, 32). The unit rms values are then converted to the full difference samples by multiplying with the designated scale factor (SCALES).

1. QL[n] = 1/Q[code[n]] where 1/Q is the inverse quantizer look-up table

2. Y[n] = QL[n] * StepSize[abits]

3. Rd[n] = Y[n] * scale_factor where Rd=reconstructed difference samples

3.7 Inverse ADPCM

The ADPCM decoding process is executed for each subband difference sample as follows;

1. Generate the prediction sample by convolving the current predictor coefficients with the previous 4 reconstructed subband samples held in the predictors history array.

P[n] = sum (Coeff[i]*R[n-i]) for i=1, 4 where n=current sample period

2. Raise the prediction sample to the power of 0.98 to induce leakage into the recursive loop.

$P[n]=P[n]^{0.98}$

3. Add the prediction sample to the reconstructed difference sample to produce a reconstructed subband sample.

R[n]=Rd[n]+P[n]

4. Update the history of the predictor, ie copy the current reconstructed subband sample to the top of the history list.

R[n-i]=R[n-i+1] for I =4, 1

In the case when PMODE=0 the predictor coefficients will be zero, the prediction sample zero, and the reconstructed subband sample equates to the differential subband sample. Although in this case the calculation of the prediction is unnecessary, it is essential that the predictor history is kept updated in case PMODE should become active in future subframes. Further, if the HFLAG is active in the current audio frame, the predictor history should be cleared prior to decoding the very first sub-subframe in the frame. The history should be updated as usual from that point on.

In the case of high frequency VQ subbands or where subbands are deselected (ie above SUBS limit) the predictor history should remain cleared until such time that the subband predictor becomes active.

3.8 Intensity Coding in subbands

The presence of intensity coding in any audio channel is flagged when JOINX is non zero. JOINX indicates the channel number where the amalgamated or joined subband audio is located (table). The reconstructed subband samples in the source channel are copied over to the corresponding subbands in the intensity channels, beginning at the subband indicated by the SUBS of the intensity channel itself. During the process of transferring the source subband audio to the intensity subbands, the amplitude of the samples are multiplied by the ratio of the source subband rms and the intensity subband rms . The source subband rms must be explicitly calculated in subframes where PMODE=1 since the scale factors for these bands represent the differential signal energy, not the absolute. However, for all intensity subbands the scale factor (SCALES) will represent the absolute rms and so they can be used directly. The ratio is calculated once for the entire subframe, or for the sub-subframe combinations when TMODE is non zero (table).

3.9 Down Matrixing

The audio coding mode for the data stream is indicated by AMODE. Using table(56) the audio channel assignment is obtained for chs 1 to 8. The decoded audio channels can then be redirected to match the physical output channel arrangement on the decoder hardware.

In the case when the physical playback arrangement has fewer channels then there are decoded channels, the decoded audio must be down matrixed to match the playback system. Fixed down matrix tables for 8-ch, 7-ch, 6-ch, 5ch, 4-ch, 3-ch and 2-ch decoded audio are given in tables(33, 34, 35, 36, 37, 38, 39, 40, 41, 42, 43). Due to the linear nature of the down matrixing, this process can operate directly on the subband samples in each channel and retain the alias cancellation properties of the filterbank (with the appropriate scaling). This avoids having to run the interpolation filterbanks for redundant channels.

3.9.1 Generation of Lt Rt

In the case when the playback system has analog or digital surround multi-channel capability, a down matrix from 5, 4, or 3 channel to Lt Rt may be desirable. In the case when the number of decoded audio channels exceeds 5, 4 or 3 respectively a first stage down mix to 5, 4 or 3 chs should be used as described above.

Tables(44, 45, 46, 47) give the down matrix equations.

3.9.1 Embedded mixing to 2-channel

One concern arising from the proliferation of multi-channel audio systems is that most home systems presently have only two channel playback capability. To accommodate this a fixed 2-channel down matrix processes is commonly used following the multi-channel decoding stage. However, for music only applications the image quality etc. of the down matrixed signal may not match that of an equivalent stereo recording found on CD.

The concept of embedded mixing is to allow the producer to dynamically specify the matrixing coefficients within the audio frame itself. In this way the stereo down mix at the decoder may be better matched to a 2-channel playback environment.

CHS*2, 7-bit down mix indexes (MCOEFFS) are transmitted along with the multi-channel audio once in every frame. The indexes are converted to coefficients using table(48). The 2-ch down mix equations are as follows,

```
Left Ch = sum ( MCOEFF[n]*Ch[n] )              for n=1, CHS
Right Ch = sum ( MCOEFF[n+CHS]*Ch[n] )         for n=1, CHS
```

where Ch(n) represents the subband samples in the (n)th audio channel..

3.10 32-band Interpolation Filterbank

The 32 subbands for each audio channel must now be converted to a single PCM time domain signal. Below is the basic algorithm used for the reconstruction of the subbands in blocks of 32 PCM samples. The 512 FIR coefficient arrays are tabulated in tables(49, 50). The non-perfect reconstruction coefficients are used when FILTS=0. Perfect reconstruction coefficients are used when FILTS=1. Normally

the cosine modulation coefficients will be pre-calculated and stored in ROM.The interpolation procedure can be expanded to reconstruct larger data blocks to reduce loop overheads. However, in the case of termination frames, the minimum resolution which may be called for is 32 PCM samples.

A) Create cosine modulation coefficients

```
SCALE=32*SQRT(2);
for (j=0,k=0;k<16;k++)
{
     for (i=0;i<16;i++)
     {
          COSMOD[j++]=cos((2.0*i+1)*(2.0*k+1)*PI/64.0);
     }
}
for (k=0;k<16;k++)
{
     for (i=0;i<16;i++)
     {
          COSMOD[j++]=cos((i)*(2.0*k+1)*PI/32.0);
     }
}
for (k=0;k<16;k++)
{
     COSMOD[j++]=0.25/(2.0*cos((2.0*k+1)*PI/128.0));
}
for (k=0;k<16;k++)
{
     COSMOD[j++]=-0.25/(2.0*sin((2.0*k+1)*PI/128.0));
}
```

B) Read in 32 new subband samples to array XIN

The xin array is loaded with a single sample from each of

the 32 subbands.

C) Multiply by cosine modulation coefficients and create temporary arrays SUM and DIFF.

```
for (j=0,k=0;k<16;k++)
    {
     A[k]=0.0;
     for (i=0;i<16;i++)
     {
         A[k]+=(XIN[2*i]+XIN[2*i+1])*COSMOD[j++];
     }
    }

for (k=0;k<16;k++)
    {
     B[k]=0.0;
     for (i=0;i<16;i++)
     {
         if(i>0)
          B[k]+=(XIN[2*i]+XIN[2*i-1])*COSMOD[j++];
         else
          B[k]+=(XIN[2*i])*COSMOD[j++];
     }
     SUM[k]=A[k]+B[k];
     DIFF[k]=A[k]-B[k];
    }
```

D) Store history

```
for (k=0;k<16;k++)
    {
     X[k]=COSMOD[j++]*SUM[k];
    }
```

```
for (k=0;k<16;k++)
    {
     X[32-k-1]=COSMOD[j++]*DIFF[k];
    }
```

E) Multiply by filter coefficients

```
for(k=31,i=0;i<32;i++,k--)
    {
     for(j=0;j<512;j+=64)
     {
         Z[i] += COEFF[i+j]*(X[i+j]-X[j+k]);
     }
    }

for(k=31,i=0;i<32;i++,k--)
    {
     for(j=0;j<512;j+=64)
     {
         Z[32+i] += COEFF[32+i+j]*(-X[i+j]-X[j+k]);
     }
    }
```

F) Create 32 PCM output samples

```
for(i=0;i<32;i++)
    {
      XOUT[i] = SCALE*Z[i];
    }
```

G) Update working arrays

```
for(i=511;i>=32;i--)
    {
     X[i] = X[i-32];
    }
```

```
for(i=0;i<NEW_SAMP;i++)
    {
     Z[i] = Z[i+32];
    }
for(i=0;i<NEW_SAMP;i++)
    {
     Z[i+32] = 0.0;
    }
```

H) Output 32 new PCM samples

At this point the 32 PCM samples are removed from the XOUT array and stored for post-processing or output buffering.

3.10.1 Lossless or near-lossless reconstruction requirements

Depending on the bit rate and the coding scheme in operation, the bit stream can specify either non-perfect or perfect reconstruction interpolation filter bank coefficients (FILTS). Since the encoder decimation filter banks are computed with 40-bit floating precision, the ability of the decoder to achieve the maximum theoretical reconstruction precision will depend on the source PCM word length and the precision of DSP core used to compute the convolutions and the way that the operations are scaled. Table (51) gives a guide to the expected reconstruction resolution. This applies equally to both perfect and non-perfect filter banks.

3.11 Low frequency Effects PCM interpolation

The audio data associated with the low-frequency effects channel is independent of the main audio channels. This channel is encoded using an 8-bit APCM process operating on a X128 decimated (120Hz bandwidth) 20-bit PCM input. The

decimated effects audio is time aligned with the current subframe audio in the main audio channels. Hence, since the delay across the 32-band interpolation filterbank is 256 samples (512 taps), care must be taken to ensure that the interpolated low-frequency effect channel is also aligned with the rest of the audio channels prior to output. No compensation is required if the effects interpolation FIR is also 512 taps. An example of such an FIR is given in table (52).

The procedure for recreating effects channel using a 512 tap 128X interpolation FIR is recreated as follows. The interpolated PCM samples are placed in the OUT array.

1. Map 7-bit scale factor to rms using table( )

```
LFErms = Table_(scales_factor)
```

2. Multiply by step-size of 7-bit quantizer.

```
RMS = LFErms * 0.0035
```

3. Generate sub sample values from the normalised values.

```
for(i=0;i<Y;i++)
{
     Sub_Sample[i]*=RMS;
}
```

where Y = number of effects samples in the current subframe

4. Interpolate by 128 using a low pass filter such as that given for each sub sample.

```
k=0;
```

```
do
{
     for(i=0;i<3;i++)
     {
          Int_Data[i]=Int_Data[i+1];
     }
     Int_Data[3]=Sub_Sample[k];
     for(j=0;j<128;j++)
     {
          OUT[j+k*128]=0.0;
          f r(i=0;i<4;i++)
          {
               OUT[j+k*128]+=Int_Data[i]*LPF[127-j+i*128];
          }
     }
     k++
}while(k<Y);
```

During termination frames the time resolution of the decimated effect samples is not sufficient to allow the low-frequency audio length to be adjust[illegible]n the decimated domain. The interpolation convolution can either be stopped at the appropriate point, or it can be completed and the surplus PCM samples deleted from the effects output buffer.

3.12 Auxiliary Data

Auxiliary data bytes AUXD may be optionally embedded in the frame at the encoding stage. The number of bytes in the array if given by the flag AUXCT.

3.13 Time Code Stamp

A time code word TIMES may be optionally embedded in the frame at the encoding stage. The 32 bit word consist of 5 fields each representing hours, minutes, seconds, frames, subframes as with the SMPTE time code format. The time code stamp represents the time measured at the start of the audio frame, at the encoder.

Field	Unit	Range
bits 0-7	subframes 1/80 frame	0 - 79
bits 8-13	frames (1/30 sec)	0 - 29
bits 14-19	seconds	0 - 59
bits 20-25	minutes	0 - 59
bits 26-31	hours	0 - 23

3.14 Dynamic Range Control Data

Dynamic range coefficients DCOEFF may be optionally embedded in the audio frame at the encoding stage. The purpose of this feature is to allow for the convenient compression of the audio dynamic range at the output of the decoder. Dynamic range compression is particularly important in listening environments where high ambient noise levels make it impossible to discriminate low level signals without risking damaging the loudspeakers during loud passages. This problem is further compounded by the growing use of 20-bit PCM audio recordings which exhibit dynamic ranges as high as 110dB.

Depending on the window size of the frame (NBLKS) either one, two or four coefficients are transmitted per audio channel for any coding mode (DYNF). If a single coefficient is transmitted, this is used for the entire frame. With two coefficients the first is used for the first half of the frame and the second for the second half of the frame. Four

coefficients are distributed over each frame quadrant. Higher time resolution is possible by interpolating between the transmitted values locally.

Each coefficient is 8-bit signed fractional Q2 binary, and represents a logarithmic gain value as shown in table (53) giving a range of +/- 31.75dB in steps of 0.25dB. The coefficients are ordered by channel number. Dynamic range compression is affected by multiplying the decoded audio samples by the linear coefficient.

The degree of compression can be altered with the appropriate adjustment to the coefficient values at the decoder or switched off completely by ignoring the coefficients.

3.15 Sub-sampled audio interpolation

If the encoded bit stream has been produced using source PCM sampling rates lower than that available at the decoder then interpolation of the PCM will be necessary to correct for the sample rate mis-match. The specification assumes that decoder hardware sample rates of 32, 44.1 and 48kHz will all be mandatory and that encoding sub-sample rates will be limited to 8, 11.02, 12, 16, 22.05 and 24kHz.

Example X2 and X4 interpolation filters are included (tables 54, 55). The procedure is similar to that shown for the low-frequency effects, except for the lower interpolation factor.

3.16 Oversampled Audio Decoding

Coherent Acoustics allows the encoding of over sampled audio

(SFREQ). Presently the specification for decoding this audio of being finalised and will be the subject of future drafts.

However decoders do not need to implement this aspect of Coherent Acoustics in order to be able receive and properly decode audio data streams encoded with higher sample rates. The current specification separates the audio data required to decode the 'base-band' audio, ie 0-24kHz and that for the oversampled audio, 24-48kHz or 24-96kHz. Since only encoded audio above 24kHz will reside in the OVER_AUDIO data array, decoders without the oversampling capability need only recognise the presence of this data array, and bypass it to remain compatible.

3.17 PCM output word length truncation

The word length of the source PCM audio input to the encoder is flagged at the decoder by PCMR. The purpose of transmitting this information is to allow for an improved truncation strategy in decoders whose output PCM word length is less than PCMR. For example, if a ultra high quality 22-bit source audio is used to produce the encoded bit stream (PCMR=4) and the maximum decoder output word length is 20-bits, the reconstructed PCM would ordinarily be truncated to 20-bits. It is well known that rounding, dithering and recursive noise shaping schemes (ie UV22, Sony SBM etc) can make use of the extra bits in order to improve the perceived quality of the truncated audio.

4.0 PCM Output Buffer strategies

The Coherent Acoustics bit stream specification is designed to reduce processing latencies and to minimise output buffer

requirements. The core coding packet is the sub-subframe which consists normally of 256 PCM samples per channel. It is possible therefore to refresh the PCM output buffer every 256 output samples. However, to realise this advantage, a slightly higher processing overhead is entailed. Since in the time available to decode the first sub-subframe, additional processes such as subframe header and side information unpacking are performed, the time which remains to decode the 256 audio samples is less than that in following sub-subframes. If a higher decode latency and/or output buffer sizes are permissible then output PCM refreshing rates can be decreased to extend up to the maximum audio window encoded in the frame. This effectively averages out the computational load over a longer time and allows for a lowering in DSP processing cycle time.

4.1 Termination Frame management

The purpose of a termination frame is to allow the encoder to arbitrarily adjust the end of the coding window such that the coded audio object length matches, to within a sample period, the duration of the video object. In effect, a termination frame forces the encoder to use an arbitrary audio window size. Hence the length of the audio frame may not be divisable by the 256 sample sub-subframes. A partial sub-subframe (PSC) may be specified within a termination frame (FTYPE) and this may also include surplus samples (SURP). In this event the partial frame is decoded as normal, except using side information from the previous 256 sample sub-subframe. Finally, any surplus samples are deleted from the end of the reconstructed PCM array or held over to cross-fade into the next 256 sample array. Since the number of samples to be output in this instance is less than 256, the output buffer 'empty' interrupt will need to be modified to reflect the smaller PCM array.

5.0 Decoder processing latency

The decoding processing latency (or delay) is defined as the time between the audio frame entering the decoder processor and the first PCM sample to leave. The latency depends on the way the audio frame is input to the decoder, the method of buffering the frame and the output buffering strategy deployed within.

5.1 Real-time Serial I/O

When the audio frame is input serially to the decoder at a rate equal to the bit rate of the data stream (real-time), the decoder is not permitted to begin processing the data until the frame has been completely loaded (an earlier entry point will be specified in later revisions). Assuming the input/and output is double buffered, the first sub-subframe is decoded and loaded to the idle output buffer over the 256 sample periods which follow. Hence the first PCM sample from the new frame appears at the output (((NBLKS+1)*32) + 256)/Fs seconds after the input frame first appeared at the decoder input (Fs=sampling frequency of PCM). For arbitrary output buffers sizes the latency becomes (((NBLKS+1)*32) +output buffer size)/Fs seconds.

5.2 Burst serial input - Real-time serial output

In this case an improvement in latency is achieved since the time to load the input audio frame to the input buffer is reduced. The latency is now, (time to input audio frame to buffer)+(output buffer size/sample rate).

5.3 Parallel input - Real-time serial output

This configuration is identical to the burst serial input

case in that the improvement over the real-time input depends on how must faster the input buffer can be loaded.

6.0 Real-time Management

Due to the real-time nature of the audio decoding process, certain considerations must be made relating to the hardling of the I/O data, the buffer management and the coding modes. A flow chart **416** of one possible decoder I/O implementation is described in fig(37). In this example the audio is decoded and output for each and every sub-subframe. For example, in the case of a fixed audio frame which contains 4 subframes, within which 4 normal sub-subframes reside, the decoder will output 16 blocks of 256 samples (per channel) over the duration of each input frame. The critical real-time process is the time taken to decode the first sub-subframe of the first subframe, since the decoder must unpack the headers, subframe side information, as well as decode the 256 PCM samples. To a lesser extent the processing times for the first sub-subframes in the remaining subframes are also critical due to the additional side information unpacking overhead. If in the event that sub-subframe decoding process exceeds the time limit then, in the case of cyclic buffering, the last 256 sample block will be repeated. More importantly, if the decoder on processing all 16 blocks of 256 samples exceeds the input frame period then frame synchronisation will be jeopardised and global muting of the outputs initiated.

6.1 Lossless and Variable real-time decoding

It is anticipated that lossless or variable decoding implementations will deploy appropriate buffers external to the decoder processor and that these buffers will be accessible using a fast input port. Real-time issues

relating to variable rate decoding depend on specifications such as the maximum allowable frame (FSIZE) and encoding window sizes (NBLKS) against the number of audio channels (CHS) and source PCM word lengths (PCMR). These are currently being finalised and will be the subject of future drafts.

7.0 Bit error management strategies

This specification assumes that the bit error rate of the medium being used to transport or store the bit stream is extremely low. This is generally the case for LD, CDA, CD ROM, DVD and computer storage. Transmission systems such as ISDN, T1, E1 and ATM are also inherently error free.

The specification does include certain error detection and correction schemes in order to compensate for occasional errors.

7.1 Non vital data

The hflag,filts,chist,pcmr,unspec,auxd data only effect the audio fidelity and do not cause the audio to become unstable. Hence this information would not normally need any protection from errors.

7.2 Majority Vote

Certain flags [amode,sfreq,rate,vernum] do not change often and any changes will usually occur when the audio is muted. These flags can effectively be averaged from frame to frame to check for consistency. If changes are detected, audio muting may be activated until the values re-stabilise.

7.3 Vital Data

In the audio frame header vital information includes ftype, surp, nblks, fsize, mix, dynf, dyct, time, auxcnt, lff. This information may change from frame to frame and cannot be averaged. To reduce error sensitivity the header data may be optionally Reed Solomon encoded with the HCRC check bytes. Otherwise the HCRC bytes should be ignored. If errors are detected and cannot be corrected decoding should proceed as normal since it is possible that the errors will not effect the decoding integrity. This can be checked later in the audio frame itself.

If optional header information is also included, this can be checked against the optional Reed Solomon check bytes OCRC.

The audio coding frame contains certain coding headers [subs, thuff, shuff, bhuff, subs, chs, vqsub, sel5, sel7, sel9, sel13, sel17, sel25, sel33, sel65, sel129, joinx] which indicate the packet formatting of the side information and audio codes themselves. By definition these headers continually change from frame to frame and can only be reliably error corrected using the audio header Reed Solomon check bytes AHCRC. If errors were found but could not be corrected decoding may proceed since it is possible that the errors will not effect the decoding integrity. If checking is not performed, AHCRC bytes are ignored.

Finally the subframes themselves can be checked for errors in two ways.

1. If variable length coding (Huffman) is used to code the side information and/or the audio codes, then only error detection is possible. Detection is achieved using the DSYNC 16-bit synchronisation word appended at the end of each subframe. On completion of the subframe unpacking the extraction array pointer should point to the first bit of

DSYNC.

Case A: If un-correctable errors were detected in either the frame or audio headers and DSYNC has not been verified, it is recommended that the entire frame be aborted and all audio channels muted.

Case B: If un-correctable errors were detected in either the frame or audio headers and DSYNC is verified, it is recommended that the decoder output the subframe PCM as normal and proceed to the next subframe.

Case C: If no errors were detected in the frame and audio headers but DSYNC is not verified, the subframe audio should be muted and the unpacking of the next subframe started from the first bit following DSYNC.

Case D: If no errors were detected in the frame and audio headers and DSYNC is also verified, the decoder should proceed as normal.

Case E: If CRC checking was not performed on the frame or audio headers and DSYNC is verified, the decoder should proceed as normal.

Case F: If CRC checking was not performed on the frame or audio headers and DSYNC is not verified, the decoder should abort the entire frame and mute all channels.

2. If variable length coding (Huffman) is not used then the side information bytes can be checked using the SICRC Reed Solomon check bytes. The audio codes (AUDIO), low frequency effects (LFE) and oversampled audio codes (OVER_AUDIO) are not specifically protected since the data itself is perceptually insensitive to minor error corruption. The DSYNC synchronisation check can still be performed, however,

on the audio subframes.

Case A: If un-correctable errors were detected in either the frame, audio headers or the side information and DSYNC has not been verified, it is recommended that the entire frame be aborted and all audio channels muted.

Case B: If un-correctable errors were detected in either the frame or audio headers and un-correctable errors were also detected in the side information the entire frame should be aborted.

Case C: If no errors were detected in the frame, audio headers or side information and DSYNC is also verified, the decoder should proceed as normal.

Case D: If CRC checking was not performed on any/all of the frame, audio headers or side information and DSYNC is verified, the decoder should proceed as normal.

Case E: If CRC checking was not performed on any/all of the frame, audio headers or side information and DSYNC is not verified, the decoder should abort the frame.

While several illustrative embodiments of the invention have been shown and described, numerous variations and alternate embodiments will occur to those skilled in the art. Such variations and alternate embodiments are contemplated, and can be made without departing from the spirit and scope of the invention as defined in the appended claims.

ADAPTIVE BIT-ALLOCATION IN TIME AND/OR FREQUENCY AND/OR CHANNELS WITHIN A MULTI-CHANNEL/MULTI-BAND DIFFERENTIAL AUDIO CODING SCHEME

ABSTRACT OF THE DISCLOSURE

This invention relates to high-quality encoding and decoding of one or more audio signals. More specifically this invention optimises the allocation of quantiser bits at any bit-rate in time and frequency across one or more audio channels within a predictive/differential multi-band coder according to a distortion/quality criteria. These criteria are determined by a psycho-acoustic analysis of the audio signals and/or the energy distributions of the differential signals in frequency and/or time.

Table 1 Maximum allowed audio window size vs. SFREQ and RATE

SFREQ	8 11 12	16 22 24	32 44.1 48	64 88.2 96	128 176 192
up to 512kbps	1024	2048	4096	-	-
" 1024kbps	-	1024	2048	-	-
" 2048kbps	-	-	1024	2048	-
" 4096kbps	-	-	-	1024	2048

where audio window size is defined as (NBLKS+1)*32 PCM samples per channel

Table 2 Maximum allowed frame size (bytes) vs. SFREQ and RATE

SFREQ	8 11 12	16 22 24	32 44.1 48	64 88.2 96	128 176 192
up to 512kbps	8k 5.8k 5.3k	8k 5.8k 5.3k	8k 5.8k 5.3k	- - -	- - -
" 1024kbps	- - -	8k 5.8k 5.3k	8k 5.8k 5.3k	- - -	- - -
" 2048kbps	- - -	- - -	8k 5.8k 5.3k	8k 5.8k 5.3k	- - -
" 4096kbps	- - -	- - -	- - -	8k 5.8k 5.3k	8k 5.8k 5.3k

Number of bytes in audio frame = (((NBLKS+1)*32)/Fs)*(Bit rate/8)

e.g. for Bit rate=384,000 bps, Fs=48kHz, then maximum audio window = 4096 samples, and maximum frame size = 32768 bits or 4k bytes

Table 3 SURP Index to number of surplus PCM samples conversion

SURP Index	Surplus Samples	
0	1	
1	2	
2	3	
3	4	
4	5	
5	6	
6	7	
7	8	
8	9	
9	10	
10	11	
11	12	
12	13	
13	14	
14	15	
15	16	
16	17	
17	18	
18	19	
19	20	
20	21	
21	22	
22	23	
23	24	
24	25	
25	26	
26	27	
27	28	
28	29	
29	30	
30	31	
31	0	(FTYPE=1)

Table 4 Sub-sampled audio decoding for standard sampling rates

SFREQ	Decode Hardware Fs	Required Filtering
8kHz	32kHz	4X Interpolation
16kHz	32kHz	2X Interpolation
32kHz	32kHz	none
11kHz	44.1kHz	4X Interpolation
22.05kHz	44.1kHz	2X Interpolation
44.1kHz	44.1kHz	none
12kHz	48kHz	4X Interpolation
24kHz	48kHz	2X Interpolation
48kHz	48kHz	none

Table 5 Oversampled audio decoding for standard sampling rates

SFREQ	Decode Hardware Fs	Required Filtering
64kHz	32kHz	none
128kHz	32kHz	none
88.2kHz	44.1kHz	none
176.4kHz	44.1kHz	none
96kHz	48kHz	none
192kHz	48kHz	none

Table 6 SUBFS to Number of subframes Conversion

SSUBFS index	No. of subframes
0	1
1	2
2	3
3	4
4	5
5	6
6	7
7	8
8	9
9	10
10	11
11	12
12	13
13	14
14	15
15	16

Table 7 CHS to Number of Audio Channels Conversion

CHS index	No. audio channels
0	1
1	2
2	3
3	4
4	5
5	6
6	7
7	8

Table 8 SUBS to Active Subband Conversion (JOINX=0)

SUBS index	No. Active Subbands
0	2
1	3
2	4
3	5
4	6
5	7
6	8
7	9
8	10
9	11
10	12
11	13
12	14
13	15
14	16
15	17
16	18
17	19
18	20
19	21
20	22
21	23
22	24
23	25
24	26
25	27
26	28
27	29
28	30
29	31
30	32
31	invalid

Table 9 VQSUB to High Frequency Starting Subband No. Conversion

VQSUB index	Start Subband No.
0	18
1	19
2	20
3	21
4	22
5	23
6	24
7	25
8	26
9	27
10	28
11	29
12	30
13	31
14	32
15	vq disabled

Table 10 Intensity Coding channel source calculation from JOINX index

JOINX index	Joint Coding	Channel Source*
0	off	n/a
1	on	Ch no. + 1
2	on	Ch no. + 2
3	on	Ch no. + 3
4	on	Ch no. + 4
5	on	Ch no. + 5
6	on	Ch no. + 6
7	on	Ch no. + 7

* if channel source no. is greater than CHS, then subtract CHS

Table 11 SUBS to Intensity Coding Subband Start No. (JOINX>0)

SUBS index	Intensity Start Subband No.
0	2
1	3
2	4
3	5
4	6
5	7
6	8
7	9
8	10
9	11
10	12
11	13
12	14
13	15
14	16
15	17
16	18
17	19
18	20
19	21
20	22
21	23
22	24
23	25
24	26
25	27
26	28
27	29
28	30
29	31
30	32
31	invalid

Table 12 THUFF to Quantizer Table Conversion

THUFF index	Quantizer Table	Table No.
0	A4	
1	B4	
2	C4	
3	Y4	

Table 13 SHUFF to Quantizer Table Conversion

SHUFF index	Quantizer Table	Table No.
0	S0_129	
1	S1_129	
2	S2_129	
3	S3_129	
4	S4_129	
5	S5_64	
6	S6_128	
7	invalid	

Table 14 BHUFF to Quantizer Table Conversion

BHUFF index	Quantizer Table	Table No.
0	B0_13	
1	B1_13	
2	B2_13	
3	B3_13	
4	B4_13	
5	B5_13	
6	B6_16	
7	B7_32	

Table 15 SEL5 to Quantizer Table Conversion

SEL5 index	Quantizer Table	Table No.
0	A5	
1	B5	

Table 16 SEL7 to Quantizer Table Conversion

SEL7 index	Quantizer Table	Table No.
0	A7	
1	B7	
2	C7	
3	Y8	

Table 17 SEL9 to Quantizer Table Conversion

SEL9 index	Quantizer Table	Table No.
0	A9	
1	B9	
2	C9	
3	D9	

Table 18 SEL13 to Quantizer Table Conversion

SEL13 index	Quantizer Table	Table No.
0	A13	
1	B13	
2	C13	
3	D13	

Table 19 SEL17 to Quantizer Table Conversion

SEL17 index	Quantizer Table	Table No.
0	A17	
1	B17	
2	C17	
3	D17	
4	E17	
5	F17	
6	G17	
7	H17	

Table 20 SEL25 to Quantizer Table Conversion

SEL25 index	Quantizer Table	Table No.
0	A25	
1	B25	
2	C25	
3	D25	
4	E25	
5	F25	
6	G25	
7	H24	

Table 21 SEL33 to Quantizer Table Conversion

SEL33 index	Quantizer Table	Table No.
0	A33	
1	B33	
2	C33	
3	D33	
4	E33	
5	F33	
6	G33	
7	Y32	

Table 22 SEL65 to Quantizer Table Conversion

SEL65 index	Quantizer Table	Table No.
0	A65	
1	B65	
2	C65	
3	D65	
4	E65	
5	F65	
6	G65	
7	Y64	

Table 23 SEL129 to Quantizer Table Conversion

SEL129 index	Quantizer Table	Table No.
0	A129	
1	B129	
2	C129	
3	D129	
4	E129	
5	F129	
6	G129	
7	Y128	

Table24 SSC to sub-subframe count conversion

SSC index	No. of sub-subframe in subframe
0	1
1	2
2	3
3	4

Table 25 PSC to subband sample count conversion

PSC index	No. of subband samples in partial sub-subframe
0	0
1	1
2	2
3	3
4	4
5	5
6	6
7	7

Table 27 6-bit Scale Factor to RMS Conversion table

Index	RMS
63	501187.23
62	389045.14
61	301995.17
60	237137.37
59	184077.20
58	142889.40
57	112201.85
56	87096.360
55	67608.298
54	52480.746
53	41209.752
52	31988.951
51	24831.331
50	19498.446
49	15135.612
48	11748.976
47	9225.7143
46	7161.3410
45	5559.0426
44	4315.1908
43	3349.6544
42	2630.2680
41	2041.7379
40	1584.9319
39	1244.5146
38	966.05088
37	749.89421
36	586.13816
35	457.08819
34	354.81339
33	275.42287
32	216.27185
31	167.88040
30	130.31668
29	114.81536
28	79.432823
27	61.659500
26	47.863009
25	37.153523
24	29.174270
23	22.646443
22	17.579236
21	13.803843
20	10.715193
19	8.3176377
18	6.5313055
17	5.0699071
16	3.9355008

15	3.0902954
14	2.3988329
13	1.8620871
12	1.4454398
11	1.1350108
10	0.8810489
9	0.6839116
8	0.5308844
7	0.4168694
6	0.3235937
5	0.2511886
4	0.1972423
3	0.1531087
2	0.1188502
1	0.0933254
0	0.0724436

Table 28 7-bit Scale Factor to RMS Conversion table

Index	RMS
0	0.047315
1	0.056234
2	0.066834
3	0.079433
4	0.094406
5	0.112202
6	0.133352
7	0.158489
8	0.188365
9	0.223872
10	0.266073
11	0.316228
12	0.375837
13	0.446684
14	0.530884
15	0.630957
16	0.749894
17	0.891251
18	1.059254
19	1.258925
20	1.496235
21	1.778279
22	2.113489
23	2.511886
24	2.985383
25	3.548133
26	4.216965
27	5.011872
28	5.956621
29	7.079458
30	8.413951
31	10.00000
32	11.88502
33	14.12538
34	16.78804
35	19.95262
36	23.71374
37	28.18383
38	33.49654
39	39.81072
40	47.31513
41	56.23413
42	66.83439
43	79.43282
44	94.40609
45	112.2018
46	133.3521
47	158.4893

48	167.8804
49	223.8721
50	266.0725
51	316.2278
52	375.8374
53	446.6835
54	530.8844
55	630.9573
56	749.8942
57	891.2509
58	1059.254
59	1258.925
60	1496.236
61	1778.279
62	2113.489
63	2511.886
64	2985.383
65	3548.134
66	4216.965
67	5011.872
68	5956.621
69	7079.458
70	8413.951
71	10000.00
72	11885.02
73	14125.37
74	16788.04
75	19952.62
76	23713.73
77	28183.82
78	33496.54
79	39810.71
80	47315.12
81	56234.13
82	66834.39
83	79432.82
84	94406.08
85	112201.8
86	133352.1
87	158489.3
88	188364.9
89	223872.1
90	266072.5
91	316227.7
92	375837.4
93	446683.5
94	530884.4
95	630957.3
96	749894.2
97	891250.9
98	1059253.
99	1258925.

100	1496235.
101	1778279.
102	2113489.
103	2511886.
104	2985382.
105	3548133.
106	4216965.
107	5011872.
108	5956621.
109	7079457.
110	8413951.
111	10000000.
112	11885022.
113	14125375.
114	16788040.
115	19952623.
116	23713737.
117	28183829.
118	33496543.
119	39810717.
120	47315125.
121	56234132.
122	66834391.
123	79432823.
124	94406087.
125	112201845.
126	133352143.
127	158489319.

Table 30 Audio Inverse Quantiser Table vs. ABIT and SEL[xx] indexes

ABIT index	Number of quantiser levels	Choice of quantiser tables (SELxx indexes)							
		0	1	2	3	4	5	6	7
0	0								
1	3	A3							
2	5	A5	B5						
3	7 (or 8)	A7	B7	C7	Y8				
4	9	A9	B9	C9	D9				
5	13	A13	B13	C13	D13				
6	17 (or 16)	A17	B17	C17	D17	E17	F17	G17	Y16
7	25	A25	B25	C25	D25	E25	F25	G25	H25
8	33 (or 32)	A33	B33	C33	D33	E33	F33	G33	Y32
9	65 (or 64)	A65	B65	C65	D65	E65	F65	G65	Y64
10	129 (or 128)	A129	B129	C129	D129	E129	F129	G129	Y128
11	256	Y256							
12	512	Y512							
13	1024	Y1024							
14	2048	Y2048							
15	4096	Y4096							
16	8192	Y8192							
17	16384	Y16384							
18	32768	Y32768							
19	32768	Y32768							
20	131072	Y131072							
21	262144	Y262144							
22	524288	Y524288							
23	1048576	Y1048576							
24	2097152	Y2097152							
25	4194304	Y4194304							
26	8388608	Y8388608							
27	16777216	Y16777216							
28-31	Invalid	Invalid							

Y = uniform mid-tread fixed-code quantizer
A,B,C,D,E,F,G = uniform mid-tread variable-code (Huffman) quantizer

Table 31 Bit Allocation Index to Quantizer Step-Size Conversion

ABIT Index	Step-size
0	n/a
1	1.6
2	1.00
3	0.80
4	0.59
5	0.50
6	0.42
7	0.34
8	0.19
9	0.11
10	0.060
11	0.03125
12	0.01563
13	7.8125E-03
14	3.9063E-03
15	1.9531E-03
16	9.7656E-04
17	4.8828E-04
18	2.4414E-04
19	1.2207E-04
20	6.1035E-05
21	3.0518E-05
22	1.5259E-05
23	7.6294E-06
24	3.8147E-06
25	1.9073E-06
26	9.5367E-07
27	4.7684E-07
28 - 31	invalid

Table 32 Bit Allocation Index to Quantizer Step-Size (lossless)

ABIT Index	Step-size
0	n/a
1	0.6666
2	0.4000
3	0.2857
4	0.2222
5	0.1538
6	0.1176
7	0.0800
8	0.0606
9	0.0308
10	0.0155
11	7.8430E-3
12	3.9139E-3
13	1.9550E-3
14	9.7704E-4
15	4.8840E-4
16	2.4417E-4
17	1.2208E-4
18	6.1037E-5
19	3.0518E-5
20	1.5259E-5
21	7.6294E-6
22	3.8147E-6
23	1.9073E-6
24	9.5367E-7
25	4.7684E-7
26	2.3842E-7
27	1.1921E-7
28-31	invalid

Table 33 Down-mix coefficients for 8-channel source material (5+3 format)

	left	left center	center	right center	right	left surround	center surround	right surround
one 1/0	0.71	0.71	1.0	0.71	0.71	0.58	0.58	0.58
two 2/0 left	1.0	0.89	0.71	0.45		0.71	0.50	
right		0.45	0.71	0.89	1.0		0.50	0.71
three 3/0 left	1.0	0.50				0.71	0.50	
center		0.87	1.0	0.87		0.35	0.71	0.35
right				0.50	1.0		0.50	0.71
three 2/1 left	1.0	0.89	0.71	0.45				
right		0.45	0.71	0.89	1.0			
surround						0.71	0.71	0.71
four 2/2 left	1.0	0.89	0.71	0.45				
right		0.45	0.71	0.89	1.0			
left surround						1.0	0.71	
right surround							0.71	1.0
four 3/1 left	1.0	0.50						
center		0.87	1.0	0.87				
right				0.50	1.0			
surround						0.71	0.71	0.71
five 3/2 left	1.0	0.50						
center		0.87	1.0	0.87				
right				0.50	1.0			
left surround						1.0	0.71	
right surround							0.71	1.0
six 4/2 left	1.0	0.50						
left center		0.87	0.71					
right center			0.71	0.87				
right				0.50	1.0			
left surround						1.0	0.71	
right surround							0.71	1.0
six 3/3 left	1.0	0.50						
center		0.86	1.0	0.86				
right				0.50	1.0			
left surround						1.0		
center surround							1.0	
right surround								1.0
seven 5/2 left	1.0							
left center		1.0						
center			1.0					
right center				1.0				
right					1.0			
left surround						1.0	0.71	
right surround							0.71	1.0
seven 4/3 left	1.0	0.50						
left center		0.87	0.71					
right center			0.71	0.87				
right				0.50	1.0			
left surround						1.0		
center surround							1.0	
right surround								1.0
eight 4/4 left	1.0	0.5						
left center		0.87	0.71					
right center			0.71	0.87				
right				0.50	1.0			
left 1 surround						0.87	0.35	
left 2 surround						0.50	0.61	
right 2 surround							0.61	0.50
right 1 surround							0.35	0.87

Table 34 Down-mix coefficients for 8-channel source material (4+4 format)

	left	left center	right center	right	left one surround	left two surround	right two surround	right one surround
one 1/0	0.71	0.71	0.71	0.71	0.41	0.41	0.41	0.41
two 2/0 left	1.0	0.89	0.45		0.41	0.35	0.20	
right		0.45	0.89	1.0		0.20	0.35	0.41
three 3/0 left	1.0	0.50			0.50	0.25		
center		0.87	0.87			0.43	0.43	
right			0.50	1.0			0.25	0.5
three 2/1 left	1.0	0.89	0.45					
right		0.45	0.89	1.0				
surround					0.71	0.71	0.71	0.71
four 2/2 left	1.0	0.89	0.45					
right		0.45	0.89	1.0				
left surround					1.0	0.87	0.50	
right surround						0.50	0.87	1.0
four 3/1 left	1.0	0.50						
center		0.87	0.87					
right			0.50	1.0	1.0	0.87	0.50	
surround						0.50	0.87	1.0
five 3/2 left	1.0	0.50						
center		0.87	0.87					
right			0.50	1.0				
left surround					1.0	0.87	0.50	
right surround						0.50	0.87	1.0
six 4/2 left	1.0							
left center		1.0						
right center			1.0					
right				1.0				
left surround					1.0	0.87	0.50	
right surround						0.50	0.87	1.0
six 3/3 left	1.0	0.50						
center		0.87	0.87					
right			0.50	1.0				
left surround					1.0	0.58		
center surround						0.82	0.82	
right surround							0.58	1.0
seven 5/2 left	0.89							
left center	0.45	0.77						
center		0.63	0.63					
right center			0.77	0.45				
right				0.89				
left surround					1.0	0.87	0.50	
right surround						0.50	0.87	1.0
seven 4/3 left	1.0							
left center		1.0						
right center			1.0					
right				1.0				
left surround					1.0	0.58		
center surround						0.82	0.82	
right surround							0.58	1.0
eight 5/3 left	0.89							
left center	0.45	0.77						
center		0.63	0.63					
right center			0.77	0.45				
right				0.89				
left surround					1.0	0.58		
center surround						0.82	0.82	
right surround							0.58	1.0

Table 36 Down-mix coefficients for 6-channel source material (4+2 format)

	left	left center	right center	right	left surround	right surround
one 1/0	0.71	0.71	0.71	0.71	0.63	0.63
two 2/0 left	1.0	0.89	0.45		1.0	
right		0.45	0.89	1.0		1.0
three 3/0	1.0	0.50			0.87	
left		0.87	0.87		0.50	0.50
center			0.50	1.0		0.87
right						
three 2/1	1.0	0.89	0.45			
left		0.45	0.89	1.0		
right					1.0	1.0
surround						
four 2/2 left	1.0	0.89	0.45			
right		0.45	0.89	1.0		
left surround					1.0	
right surround						1.0
four 3/1 left	1.0	0.50				
center		0.87	0.87			
right			0.50	1.0		
surround					1.0	1.0
five 3/2 left	1.0	0.50				
center		0.87	0.87			
right			0.50	1.0		
left surround					1.0	
right surround						1.0
six 3/3 left	1.0	0.50				
center		0.87	0.87			
right			0.50	1.0		
left surround					0.82	
center surround					0.58	0.58
right surround						0.82

Table 37 Down-mix coefficients for 6-channel source material (3+3 format)

	left	center	right	left surround	center surround	right surround
one 1/0	0.71	0.71	0.71	0.63		0.63
two 2/0 left	1.0	0.45		1.0		
right		0.89	1.0			1.0
three 3/0	1.0			0.87	0.50	
left		1.0		0.50		0.50
center			1.0			0.87
right						
three 2/1	1.0	0.71				
left		0.71	1.0			
right				0.71	0.71	0.71
surround						
four 2/2 left	1.0	0.71				
right		0.71	1.0			
left surround				1.0	0.71	
right surround					0.71	1.0
four 3/1 left	1.0					
center		1.0				
right			1.0			
surround				0.71	0.71	0.71
five 3/2 left	1.0					
center		1.0				
right			1.0			
left surround				1.0	0.71	
right surround					0.71	1.0
six 4/2 left	0.87					
center left	0.50	0.71				
center right		0.71	0.50			
right			0.87			
left surround				1.0	0.71	
right surround					0.71	1.0

Table 35 Down-mix coefficients for 7-channel source material (5+2 format)

	left	left center	center	right center	right	left surround	right surround
one 1/0	0.71	0.71	1.0	0.71	0.71	0.63	0.63
two 2/0 left	1.0	0.89	0.71	0.45		1.0	
right		0.45	0.71	0.89	1.0		1.0
three 3/0	1.0	0.50				0.87	
left		0.87	1.0	0.87		0.50	0.50
center				0.50	1.0		0.87
right							
three 2/1	1.0	0.89	0.71	0.45			
left		0.45	0.71	0.89	1.0		
right						1.0	1.0
surround							
four 2/2 left	1.0	0.89	0.71	0.45			
right		0.45	0.71	0.89	1.0		
left surround						1.0	
right surround							1.0
four 3/1 left	1.0	0.50					
center		0.87	1.0	0.87			
right				0.50	1.0		
surround						1.0	1.0
five 3/2 left	1.0	0.50					
center		0.87	1.0	0.87			
right				0.50	1.0		
left surround						1.0	
right surround							1.0
six 4/2 left	1.0	0.50					
left center		0.87	0.71				
right center			0.71	0.87			
right				0.50	1.0		
left surround						1.0	
right surround							1.0
six 3/3 left	1.0	0.50					
center		0.87	1.0	0.87			
right				0.50	1.0		
left surround						0.82	
center surround						0.58	0.58
right surround							0.82
seven 4/3	1.0	0.50					
left		0.87	0.71				
left center			0.71	0.87			
right center				0.50	1.0		
right						0.82	
left surround						0.58	0.58
center surround							0.82
right surround							

Table 38 Down-mix coefficients for 5-channel source material (3+2 format)

	left	center	right	left surround	right surround
one 1/0	0.71	1.0	0.71	0.50	0.50
two 2/0 left	1.0	0.71		0.71	
right		0.71	1.0		0.71
three 3/0 left	1.0			0.71	
center		1.0			
right			1.0		0.71
three 2/1 left	1.0	0.71			
right		0.71	1.0		
surround				0.71	0.71
four 2/2 left	1.0	0.71			
right		0.71	1.0		
left surround				1.0	
right surround					1.0
four 3/1 left	1.0				
center		1.0			
right			1.0		
surround				0.71	0.71

Table 39 Down-mix coefficients for 4-channel source material (2+2 format)

		left	right	left surround	right surround
one	1/0	0.71	0.71	0.50	0.50
two	2/0 left	1.0		0.71	
	right		1.0		0.71
three	3/0	0.82		0.71	
	left	0.58	0.58		
	center		0.82		0.71
	right				
three	2/1	1.0			
	left		1.0		
	right			0.71	0.71
	surround				
four	3/1 left	0.82			
	center	0.58	0.58		
	right		0.82		
	surround			0.71	0.71

Table 40 Down-mix coefficients for 4-channel source material (3+1 format)

		left	center	right	surround
one	1/0	0.71	1.0	0.71	0.71
two	2/0 left	1.0	0.71		0.71
	right		0.71	1.0	0.71
three	3/0	1.0			0.71
	left		1.0		
	center			1.0	0.71
	right				
three	2/1	1.0	0.71		
	left		0.71	1.0	
	right				1.0
	surround				

Table 41 Down-mix coefficients for 3-channel source material (2+1 format)

		left	right	surround
one	1/0	0.71	0.71	0.5
two	2/0 left	1.0		0.5
	right		1.0	0.5
three	3/0	0.82		0.5
	left	0.58	0.58	
	center		0.82	0.5
	right			

Table 42 Down-mix coefficients for 3-channel source material (3+0 format)

		left	center	right
one	1/0	0.71	1.0	0.71
two	2/0 left	1.0	0.71	
	right		0.71	1.0

Table 43 Down-mix coefficients for 2-channel source material (2+0 format)

		left	right
one	1/0	0.71	0.71

Table 44 Down-mix coefficients for 5-channel source material (3+2 format) to matrixed two-channel Lt Rt

	left	center	right	left surround	right surround
Matrixed two channel 2/0					
Left$_T$	1.0	0.707		-0.707	-0.707
Right$_T$		0.707	1.0	+0.707	+0.707

Left$_T$ = (1.0 * left) + (0.707 * center) - (0.707 * (left surround + right surround))
Right$_T$ = (1.0 * right) + (0.707 * center) + (0.707 * (left surround + right surround))

Table 45 Down-mix coefficients for 4-channel source material (3+1 format) to matrixed two-channel Lt Rt

	left	center	right	surround
Matrixed two channel 2/0				
Left$_T$	1.0	0.707		-0.707
Right$_T$		0.707	1.0	+0.707

Left$_T$ = (1.0 * left) + (0.707 * center) - (0.707 * surround)
Right$_T$ = (1.0 * right) + (0.707 * center) + (0.707 * surround)

Table 46 Down-mix coefficients for 4-channel source material (2+2 format) to matrixed two-channel Lt Rt

	left	right	left surround	right surround
Matrixed two channel 2/0				
Left$_T$	1.0		-0.707	-0.707
Right$_T$		1.0	+0.707	+0.707

Left$_T$ = (1.0 * left) - (0.707 * (left surround + right surround))
Right$_T$ = (1.0 * right) + (0.707 * (left surround + right surround))

Table 47 Down-mix coefficients for 3-channel source material (2+1 format) to matrixed two-channel Lt Rt

	left	right	surround
Matrixed two channel 2/0			
Left$_T$	1.0		-0.707
Right$_T$		1.0	+0.707

Left$_T$ = (1.0 * left) - (0.707 * surround)
Right$_T$ = (1.0 * right) + (0.707 * surround)

Table 48 Embedded down-mix index to coefficient conversion

Index 7-bits	Attenuation factor	Attenuation [dB]
0	1 0000	0 00
1	0 9886	- 0 10
2	0 9716	- 0 25
3	0 9441	- 0 50
4	0 9173	- 0 75
5	0 8912	- 1 00
6	0 8660	- 1 25
7	0 8414	- 1 50
8	0 8175	- 1 75
9	0 7943	- 2 00
10	0 7718	- 2 25
11	0 7499	- 2 50
12	0 7286	- 2 75
13	0 7079	- 3 00
14	0 6879	- 3 25
15	0 6683	- 3 50
16	0 6494	- 3 75
17	0 6310	- 4 00
18	0 6131	- 4 25
19	0 5957	- 4 50
20	0 5788	- 4 75
21	0 5623	- 5 00
22	0 5464	- 5 25
23	0 5309	- 5 50
24	0 5158	- 5 75
25	0 5012	- 6 00
26	0 4467	- 7 00
27	0 3981	- 8 00
28	0 3548	- 9 00
29	0 3162	- 10 00
30	0 2818	- 11 00
31	0 2512	- 12 00
32	0 2239	- 13 00
33	0 1995	- 14 00
34	0 1778	- 15 00
35	0 1585	- 16 00
36	0 1413	- 17 00
37	0 1259	- 18 00
38	0 1122	- 19 00
39	0 1000	- 20 00
40	0 0891	- 21 00
41	0 0794	- 22 00
42	0 0708	- 23 00
43	0 0631	- 24 00
44	0 0531	- 25 50
45	0 0447	- 27 00
46	0 0376	- 28.50
47	0.0316	- 30 00
48	0 0266	- 31.50

49	0 0224	- 33 00
50	0 0188	- 34 50
51	0 0158	- 36 00
52	0.0133	- 37 50
53	0 0112	- 39 00
54	0 0094	- 40 50
55	0 0079	- 42 00
56	0 0056	- 45 00
57	0 0040	- 48 00
58	0 0028	- 51 00
59	0 0020	- 54 00
60	0 0014	- 57 00
61	0 0010	- 60 00
62	0 0005	- 66 00
63	0 0003	- 72 00
64	0 0000	mute

Table 49 Non-PR 32-Band Interpolation FIR Coefficients

-1.390191784E-007
-1.693738625E-007
-2.030677564E-007
-2.404238444E-007
-2.818143514E-007
-3.276689142E-007
-3.784752209E-007
-4.347855338E-007
-4.972276315E-007
-5.665120852E-007
-6.434325428E-007
-7.288739425E-007
-8.238164355E-007
-9.293416952E-007
-1.046637067E-006
-1.176999604E-006
-1.321840614E-006
-1.482681114E-006
-1.661159786E-006
-1.859034001E-006
-2.078171747E-006
-2.320550948E-006
-2.588257530E-006
-2.883470643E-006
-3.208459020E-006
-3.565570978E-006
-3.957220997E-006
-4.385879038E-006
-4.854050530E-006
-5.364252502E-006
-5.918994248E-006
-6.520755960E-006
-7.171964626E-006
-7.874960829E-006
-8.631964192E-006
-9.445050637E-006
-1.031611009E-005
-1.124680875E-005
-1.223855270E-005
-1.329243969E-005
-1.440921824E-005
-1.558924305E-005
-1.683242772E-005
-1.813820381E-005
-1.950545993E-005
-2.093250441E-005
-2.241701623E-005
-2.395598858E-005
-2.554569073E-005

-2.718161704E-005
-2.885844333E-005
-3.056998685E-005
-3.230916263E-005
-3.406793985E-005
-3.583733633E-005
-3.760734762E-005
-3.936696885E-005
-4.110412556E-005
-4.280570283E-005
-4.445751256E-005
-4.604430433E-005
-4.754976908E-005
-4.895655002E-005
-5.024627535E-005
+5.139957648E-005
+5.239612074E-005
+5.321469871E-005
+5.383323878E-005
+5.422891263E-005
+5.437819709E-005
+5.425697600E-005
+5.384063843E-005
+5.310418419E-005
+5.202236207E-005
+5.056979353E-005
+4.872112549E-005
+4.645117951E-005
+4.373511547E-005
+4.054862075E-005
+3.686808850E-005
+3.267079956E-005
+2.793515523E-005
+2.264085742E-005
+1.676913780E-005
+1.030297699E-005
+3.227306706E-006
-4.470633485E-006
-1.280130618E-005
-2.177240640E-005
-3.138873581E-005
-4.165195787E-005
-5.256036457E-005
-6.410864444E-005
-7.628766616E-005
-8.908427117E-005
-1.024810626E-004
-1.164562127E-004
-1.309833024E-004
-1.460311323E-004
-1.615635992E-004
-1.775395358E-004

-1.939126523E-004
-2.106313768E-004
-2.276388550E-004
-2.448728774E-804
-2.622658503E-004
-2.797449124E-004
-2.972317743E-004
-3 146430245E-004
-3.318900708E-004
-3.488793736E-004
-3.655125911E-004
-3.816867538E-004
-3.972945851E-004
-4.122247046E-004
-4.263620067E-004
-4.395879805E-004
-4.517810594E-004
-4.628172028E-004
-4.725702747E-004
-4.809123348E-004
-4.877146275E-004
-4.928477574E-004
-4.961824161E-004
-4.975944757E-004
-4.969481961E-004
-4.941228544E-004
-4.889960401E-004
+4.814492422E-004
+4.713678791E-004
+4.586426076E-004
+4.431701091E-004
+4.248536134E-004
+4.036037717E-004
+3.793396754E-004
+3.519894381E-004
+3.214911267E-004
+2.877934603E-004
+2.508567995E-004
+2.106537577E-004
+1.671699720E-004
+1.204049113E-004
+7.037253090E-005
+1.710198012E-005
-3.936182839E-005
-9.895755647E-005
-1.616069785E-004
-2.272142592E-004
-2.956658591E-004
-3.668301215E-004
-4.405563814E-004
-5.166754709E-004
-5.949990009E-004

-6.753197522E-004
-7.574109477E-004
-8.410271257E-004
-9.259034996E-004
-1.011756598E-003
-1.098284614E-003
-1.185167348E-003
-1.272067428E-003
-1.358630019E-003
-1.444484224E-003
-1.529243193E-003
-1.612505526E-003
-1.693855622E-003
-1.772865304E-003
-1.849094522E-003
-1.922092517E-003
-1.991399564E-003
-2.056547208E-003
-2.117061289E-003
-2.172462177E-003
-2.222266514E-003
-2.265989315E-003
-2.303145360E-003
-2.333251061E-003
-2.355825622E-003
-2.370394068E-003
-2.376487479E-003
-2.373647178E-003
-2.361423569E-003
-2.339380793E-003
-2.307097195E-003
-2.264167881E-003
-2.210205887E-003
-2.144844970E-003
-2.067740774E-003
-1.978572691E-003
-1.877046190E-003
-1.762894331E-003
-1.635878929E-003
+1.495792647E-003
+1.342460280E-003
+1.175740734E-003
+9.955273708E-004
+8.017504588E-004
+5.943773431E-004
-3.734139318E-004
+1.389056415E-004
-1.090620208E-004
-3.703825989E-004
-6.448282511E-004
-9.322494152E-004
-1.232374110E-003

-1.544908970E-003
-1.869517611E-003
-2.205822384E-003
-2.553403843E-003
-2.911801683E-003
-3.280514618E-003
-3.659002949E-003
-4.046686925E-003
-4.442950245E-003
-4.847140983E-003
-5.258570891E-003
-5.676518660E-003
-6.100233644E-003
-6.528933067E-003
-6.961807609E-003
-7.398022339E-003
-7.836719044E-003
-8.277016692E-003
-8.718019351E-003
-9.158811532E-003
-9.598465636E-003
-1.003804382E-002
-1.047059800E-002
-1.090117730E-002
-1.132682897E-002
-1.174659748E-002
-1.215953380E-002
-1.256469358E-002
-1.296114177E-002
-1.334795821E-002
-1.372423489E-002
-1.408908330E-002
-1.444163360E-002
-1.478104480E-002
-1.510649733E-002
-1.541720331E-002
-1.571240649E-002
-1.599138230E-002
-1.625344716E-002
-1.649795473E-002
-1.672429405E-002
-1.693190821E-002
-1.712027565E-002
-1.728892699E-002
-1.743743755E-002
-1.756543480E-002
-1.767260395E-002
-1.775865816E-002
-1.782339066E-002
-1.786663756E-002
-1.788828894E-002
+1.788828894E-002

+1.786663756E-002
+1.782339066E-002
+1.775865816E-002
+1.767260395E-002
+1.756543480E-002
+1.743743755E-002
+1.728892699E-002
+1.712027565E-002
+1.693190821E-002
+1.672429405E-002
+1.649795473E-002
+1.625344716E-002
+1.599138230E-002
+1.571240649E-002
+1.541720331E-002
+1.510649733E-002
+1.478104480E-002
+1.444163360E-002
+1.408908330E-002
+1.372423489E-002
+1.334795821E-002
+1.296114177E-002
+1.256469358E-002
+1.215953380E-002
+1.174659748E-002
+1.132682897E-002
+1.090117730E-002
+1.047059800E-002
+1.003604382E-002
+9.598465636E-003
+9.158811532E-003
+8.718019351E-003
+8.277016692E-003
+7.836719044E-003
+7.398022339E-003
+6.961807609E-003
+6.528933067E-003
+6.100233644E-003
+5.676518660E-003
+5.258570891E-003
+4.847140983E-003
+4.442950245E-003
+4.046686925E-003
+3.659002949E-003
+3.280514618E-003
+2.911801683E-003
+2.553403843E-003
+2.205822384E-003
+1.869517611E-003
+1.544906970E-003
+1.232374110E-003
+9.322494152E-004

+6.448282511E-004
+3.703825989E-004
+1.090620208E-004
-1.389056415E-004
-3.734139318E-004
-5.943773431E-004
-8.017504588E-004
-9.955273708E-004
-1.175740734E-003
-1.342460280E-003
-1.495792647E-003
+1.635878929E-003
+1.762894331E-003
+1.877046190E-003
+1.978572691E-003
+2.067740774E-003
+2.144844970E-003
+2.210205887E-003
+2.264167881E-003
+2.307097195E-003
+2.339380793E-003
+2.361423569E-003
+2.373647178E-003
+2.376487479E-003
+2.370394068E-003
+2.355825622E-003
+2.333251061E-003
+2.303145360E-003
+2.265989315E-003
+2.222266514E-003
+2.172462177E-003
+2.117061289E-003
+2.056547208E-003
+1.991399564E-003
+1.922092517E-003
+1.849094522E-003
+1.772865304E-003
+1.693855622E-003
+1.612505526E-003
+1.529243193E-003
+1.444484224E-003
+1.358630019E-003
+1.272067428E-003
+1.185167348E-003
+1.098284614E-003
+1.011756598E-003
+9.259034996E-004
+8.410271257E-004
+7.574109477E-004
+6.753197522E-004
+5.949990009E-004
+5.166754709E-004

+4.405563814E-004
+3.668301215E-004
+2.956659591E-004
+2.272142592E-004
+1.616069785E-004
+9.895755647E-005
+3.936182839E-005
-1.710198012E-005
-7.037253090E-005
-1.204049113E-004
-1.671699720E-004
-2.106537577E-004
-2.508567995E-004
-2.877934603E-004
-3.214911267E-004
-3.519894381E-004
-3.793396754E-004
-4.036037717E-004
-4.248536134E-004
-4.431701091E-004
-4.586426076E-004
-4.713678791E-004
-4.814492422E-004
+4.889960401E-004
+4.941228544E-004
+4.969481961E-004
+4.975944757E-004
+4.961824161E-004
+4.928477574E-004
+4.877146275E-004
+4.809123348E-004
+4.725702747E-004
+4.628172028E-004
+4.517810594E-004
+4.395879805E-004
+4.263620067E-004
+4.122247046E-004
+3.972945851E-004
+3.816867538E-004
+3.655125911E-004
+3.488793736E-004
+3.318900708E-004
+3.146430245E-004
+2.972317743E-004
+2.797449124E-004
+2.622658503E-004
+2.448728774E-004
+2.276388550E-004
+2.106313768E-004
+1.939126523E-004
+1.775395358E-004
+1.615635992E-004

+1.460311323E-004
+1.309833024E-004
+1.164562127E-004
+1.024810628E-004
+8.908427117E-005
+7.628766616E-005
+6.410864444E-005
+5.256036457E-005
+4.165195787E-005
+3.138873581E-005
+2.177240640E-005
+1.280130618E-005
+4.470633485E-006
-3.227306706E-006
-1.030297699E-005
-1.676913780E-005
-2.264085742E-005
-2.793515523E-005
-3.267079956E-005
-3.686808850E-005
-4.054862075E-005
-4.373511547E-005
-4.645117951E-005
-4.872112549E-005
-5.056979353E-005
-5.202236207E-005
-5.310418419E-005
-5.384063843E-005
-5.425697600E-005
-5.437819709E-005
-5.422891263E-005
-5.383323878E-005
-5.321469871E-005
-5.239612074E-005
-5.139957648E-005
+5.024627535E-005
+4.895655002E-005
+4.754976908E-005
+4.604430433E-005
+4.445751256E-005
+4.280570283E-005
+4.110412556E-005
+3.936696885E-005
+3.760734762E-005
+3.583733633E-005
+3.406793985E-005
+3.230916263E-005
+3.056998685E-005
+2.885844333E-005
+2.718161704E-005
+2.554569073E-005
+2.395598858E-005

+2.241701623E-005
+2.093250441E-005
+1.950545993E-005
+1.813820381E-005
+1.683242772E-005
+1.558924305E-005
+1.440921824E-005
+1.329243969E-005
+1.223855270E-005
+1.124680875E-005
+1.031611009E-005
+9.445050637E-006
+8.631964192E-006
+7.874960829E-006
+7.171964626E-006
+6.520755960E-006
+5.918994248E-003
+5.364252502E-006
+4.854050530E-006
+4.385879038E-006
+3.957220997E-006
+3.565570978E-006
+3.208459020E-006
+2.883470643E-006
+2.588257530E-006
+2.320550948E-006
+2.078171747E-006
+1.859034001E-006
+1.661159786E-006
+1.482681114E-006
+1.321840614E-006
+1.176999604E-006
+1.046637067E-006
+9.293416952E-007
+8.238164355E-007
+7.288739425E-007
+6.434325428E-007
+5.665120852E-007
+4.972276315E-007
+4.347855338E-007
+3.784752209E-007
+3.276689142E-007
+2.818143514E-007
+2.404238444E-007
+2.030677564E-007
+1.693738625E-007
+1.390191784E-007

Table 50 PR 32-Band Interpolation FIR Coefficients

+1.135985195E-010
+7.018770981E-011
-1.608403011E-008
-5.083275667E-008
-1.543309907E-007
-3.961981463E-007
-7.342250683E-007
-3.970030775E-007
-4.741137047E-007
-6.022448247E-007
-6.628192182E-007
-6.982898526E-007
-7.020648809E-007
-6.767839409E-007
-6.262345096E-007
-5.564140224E-007
+7.003467317E-007
+8.419976893E-007
+9.742954035E-007
+1.085227950E-006
+1.162929266E-006
+1.194632091E-006
+1.179182050E-006
+1.033426656E-006
+9.451737242E-007
+1.975324267E-006
+1.190443072E-006
+5.234479659E-007
+2.014677420E-007
+7.834767501E-008
-6.702406963E-010
-1.613285505E-009
-2.682709610E-009
-3.399493131E-009
+1.314406006E-008
+7.506701927E-009
+2.788728892E-008
+1.444918922E-007
+3.132386439E-007
+1.399798180E-006
+2.032118118E-006
+2.715013807E-006
+3.453840463E-006
+4.195037945E-006
+4.896494374E-006
+5.516381407E-006
+6.015239251E-006
+6.361419310E-006
+6.606985809E-006
+6.087732567E-006

+7.941360309E-00
+7.568834008E-00
+6.986399967E-00
+6.225028756E-00
+5.315936960E-00
+4.429412002E-00
+3.332600045E-00
+8.427224429E-00
+4.341498823E-00
+9.458596395E-00
+2.975164826E-00
+6.402664354E-00
-3.246264413E-00
-3.809887872E-00
+8.434094667E-00
+6.437721822E-00
+1.189317118E-00
+2.497214155E-00
+3.617151151E-00
+3.157242645E-00
+2.319611212E-00
+7.869333785E-00
+9.826449968E-00
+1.177108606E-005
+1.379448349E-00
+1.571428584E-005
+1.743183020E-005
+1.884208177E-005
+1.987093310E-005
+2.042970118E-005
-3.144468428E-005
-3.334947178E-005
-3.460439257E-00
-3.515914432E-005
-3.495384954E-005
-3.397853652E-00
-3.225446198E-00
-2.978993689E-005
-2.677291741E-00
-1.806914770E-00
-1.776588037E-005
-1.661818715E-005
-1.207003334E-00
-6.993315310E-00
-5.633860383E-00
-9.984935332E-00
-1.470520488E-00
-1.853591357E-006
+7.198007665E-007
+3.086857760E-0
+6.084746474E-0
+9.561075785E-0

+1.309637537E-005
+2.263354872E-005
+2.847247197E-005
+3.415624451E-005
+3.946387005E-005
+4.425736552E-005
+4 839275425E-005
+5.176846025E-005
+5.429694284E-005
+5.595519906E-005
+4.916387297E-006
+9.299508747E-006
+1.356193479E-005
+1.751866148E-005
+2.093936746E-005
+2.382549276E-005
+2.537086584E-005
+2.618136386E-005
+2.554462844E-005
+3.018750249E-005
+2.570833203E-005
+1.985177369E-005
+1.191342653E-005
+2.525620175E-006
-1.521241393E-005
-1.617751332E-005
+1.992636317E-005
+1.774702469E-005
+4.624524081E-005
+5.610509834E-005
+6 568001118E-005
+7.513730816E-005
+8.413690375E-005
+8.757545584E-005
+9.517164290E-005
+1.020687996E-004
+1.084438481E-004
+1.140582463E-004
+1.187910311E-004
+1.224978914E-004
+1.250260248E-004
+1.262027217E-004
+1.226499153E-004
+1.213575742E-004
+1.180980107E-004
+1.126275165E-004
+1.047207043E-004
+9.417100227E-005
+8.078388782E-005
+6.447290798E-005
+4.491530854E-005
+2.470704203E-005

-1.714242217E-006
-3.193307566E-005
-6.541742187E-005
-1.024175072E-004
-1.312203678E-004
-1.774113771E-004
-2.233728592E-004
-2.682086197E-004
-3.347633174E-004
-3.906481725E-004
-4.490280990E-004
-5.099929986E-004
-5.729619297E-004
-6.358824321E-004
-7.021900383E-004
-7.698345580E-004
-8.385353722E-004
-9.078957955E-004
-9.775133803E-004
-1.046945457E-003
-1.115717343E-003
-1.183370827E-003
-1.252829796E-003
-1.316190348E-003
-1.376571832E-003
-1.433344092E-003
-1.485876855E-003
-1.533520175E-003
-1.575609902E-003
-1.611457788E-003
-1.640390139E-003
-1.661288203E-003
-1.674512983E-003
-1.678415807E-003
-1.672798418E-003
-1.656501088E-003
-1.633993932E-003
-1.593449386E-003
+1.542080659E-003
+1.479332102E-003
+1.395521569E-003
+1.303116791E-003
+1.196175464E-003
+1.073757303E-003
+9.358961834E-004
+7.817269652E-004
+6.114174030E-004
+4.244441516E-004
+2.206075296E-004
-2.719412748E-007
-2.382978710E-004
-4.935106263E-004

-7.658848190E-004
-1.055365428E-003
-1.361547387E-003
-1.684492454E-003
-2.023874084E-003
-2.379294252E-003
-2.750317100E-003
-3.136433195E-003
-3.537061159E-003
-3.951539751E-003
-4.379155114E-003
-4.819062538E-003
-5.270531867E-003
-5.732392892E-003
-6.203945260E-003
-6.683901884E-003
-7.170005701E-003
-7.664063945E-003
-8.162760176E-003
-8.665001951E-003
-9.170533158E-003
-9.676489048E-003
-1.018219907E-002
-1.068630442E-002
-1.118756086E-002
-1.168460958E-002
-1.217562053E-002
-1.265939046E-002
-1.313448418E-002
-1.359948888E-002
-1.405300573E-002
-1.449365262E-002
-1.492007636E-002
-1.533095632E-002
-1.572482102E-002
-1.610082202E-002
-1.645756140E-002
-1.679391414E-002
-1.710879989E-002
-1.740120351E-002
-1.767017506E-002
-1.791484281E-002
-1.813439466E-002
-1.832821220E-002
-1.849545911E-002
-1.863567345E-002
-1.874836907E-002
-1.883326657E-002
-1.889026538E-002
-1.891860925E-002
+1.891860925E-002
+1.889026538E-002

+1.883326657E-002
+1.874836907E-002
+1.863567345E-002
+1.849545911E-002
+1.832821220E-002
+1.813439466E-002
+1.791484281E-002
+1.767017506E-002
+1.740120351E-002
+1.710879989E-002
+1.679391414E-002
+1.645756140E-002
+1.610082202E-002
+1.572482102E-002
+1.533095632E-002
+1.492007636E-002
+1.449365262E-002
+1.405300573E-002
+1.359948838E-002
+1.313448418E-002
+1.265939046E-002
+1.217562053E-002
+1.168460958E-002
+1.118756086E-002
+1.068630442E-002
+1.018219907E-002
+9.676489048E-003
+9.170533158E-003
+8.665001951E-003
+8.162760176E-003
+7.664063945E-003
+7.170005701E-003
+6.683901884E-003
+6.203945260E-003
+5.732392892E-003
+5.270531867E-003
+4.819062538E-003
+4.379155114E-003
+3.951539751E-003
+3.537061159E-003
+3.136433195E-003
+2.750317100E-003
+2.379294252E-003
+2.023874084E-003
+1.684492454E-003
+1.361547387E-003
+1.055365428E-003
+7.658848190E-004
+4.935106263E-004
+2.382978710E-004
+2.719412748E-007
-2.206075296E-004

-4.244441516E-004
-6.114174030E-004
-7.817269652E-004
-9.358961834E-004
-1.073757303E-003
-1.196175464E-003
-1.303116791E-003
-1.395521569E-003
-1.479332102E-003
-1.542080659E-003
+1.593449386E-003
+1.633993932E-003
+1.656501088E-003
+1.672798416E-003
+1.678415807E-003
+1.674512983E-003
+1.661288203E-003
+1.640390139E-003
+1.611457788E-003
+1.575609902E-003
+1.533520175E-003
+1.485876855E-003
+1.433344092E-003
+1.376571832E-003
+1.316190348E-003
+1.252829796E-003
+1.183370827E-003
+1.115717343E-003
+1.046945457E-003
+9.775133803E-004
+9.078957955E-004
+8.385353722E-004
+7.698345580E-004
+7.021900383E-004
+6.358824321E-004
+5.729619297E-004
+5.099929986E-004
+4.490280990E-004
+3.906481725E-004
+3.347633174E-004
+2.682086197E-004
+2.233728592E-004
+1.774113771E-004
+1.312203676E-004
+1.024175072E-004
+6.541742187E-005
+3.193307566E-005
+1.714242217E-006
-2.470704203E-005
-4.491530654E-005
-6.447290798E-005
-8.078388782E-005

-9.417100227E-005
-1.047207043E-004
-1.126275165E-004
-1.180980107E-004
-1.213575742E-004
-1.226499153E-004
-1.262027217E-004
-1.250260248E-004
-1.224978914E-004
-1.187910311E-004
-1.140582463E-004
-1.084438481E-004
-1.020687996E-004
-9.517164290E-005
-8.757545584E-005
-8.413690375E-005
-7.513730816E-005
-6.568001118E-005
-5.610509834E-005
-4.624524081E-005
-1.774702469E-005
-1.992636317E-005
+1.617751332E-005
+1.521241393E-005
-2.525620175E-006
-1.191342653E-005
-1.985177369E-005
-2.570833203E-005
-3.018750249E-005
-2.554462844E-005
-2.618136386E-005
-2.537086584E-005
-2.362549276E-005
-2.093936746E-005
-1.751866148E-005
-1.356193479E-005
-9.299508747E-006
-4.916387297E-006
-5.595519906E-005
-5.429694284E-005
-5.176846025E-005
-4.839275425E-005
-4.425736552E-005
-3.946387005E-005
-3.415624451E-005
-2.847247197E-005
-2.263354872E-005
-1.309637537E-005
-9.561075785E-006
-6.084744[illegible]E-006
-3.086857760E-006
-7.198007665E-007

+1.853591357E-006
+1.470520488E-006
+9.984935332E-007
+5.633860383E-007
+6.993315310E-006
+1.207003334E-005
+1.661818715E-005
+1.776598037E-005
+1.806914770E-005
+2.677291741E-005
+2.978993689E-005
+3.225446198E-005
+3.397853652E-005
+3.495384954E-005
+3.515914432E-005
+3.460439257E-005
+3.334947178E-005
+3.144468428E-005
-2.042970118E-005
-1.987093310E-005
-1.884208177E-005
-1.743183020E-005
-1.571428584E-005
-1.379448349E-005
-1.177108606E-005
-9.826449968E-006
-7.869333785E-006
-2.319611212E-006
-3.157242645E-006
-3.617151151E-006
-2.497214155E-006
-1.189317118E-006
-6.437721822E-008
-8.434094667E-008
+3.809887872E-008
+3.246264413E-008
-6.402664354E-008
-2.975164826E-008
-9.458596395E-008
-4.341498823E-007
-8.427224429E-007
-3.332600045E-006
-4.429412002E-006
-5.315936960E-006
-6.225028756E-006
-6.986399967E-006
-7.568834006E-006
-7.941360309E-006
-8.087732587E-006
-8.006985809E-006
-6.361419310E-006
-6.015239251E-006

-5.516381407E-006
-4.896494374E-006
-4.195037945E-006
-3.453840463E-006
-2.715013807E-006
-2.032118118E-006
-1.399798100E-006
-3.132386439E-007
-1.444918922E-007
-2.788728892E-008
-7.506701927E-009
-1.314406006E-008
+3.399493131E-009
+2.682709610E-009
+1.613285505E-009
+6.702406963E-010
-7.834767501E-008
-2.014677420E-007
-5.234479659E-007
-1.190443072E-006
-1.975324267E-006
-9.451737242E-007
-1.033426656E-006
-1.179182050E-006
-1.194632091E-006
-1.162929266E-006
-1.085227950E-006
-9.742954035E-007
-8.419976893E-007
-7.003467317E-007
+5.584140224E-007
+6.262345096E-007
+6.767839409E-007
+7.020648809E-007
+6.982898526E-007
+6.628192182E-007
+6.022448247E-007
+4.741137047E-007
+3.970030775E-007
+7.342250683E-007
+3.961981463E-007
+1.543309907E-007
+5.083275667E-008
+1.608403011E-008
-7.018770981E-011
-1.135985195E-010

Table 51 Decoder Reconstruction accuracy against DSP precision

DSP Core precision	Reconstruction Accuracy
16-bit fixed point	15-bits
20-bit fixed point	18.5-bits
24-bit fixed point	21.5-bits
32-bit floating point	24-bits

Table 52 Low Frequency Effects Interpolation FIR Coefficients

-3.2601731292595250E-003
-2.8795015086227620E-004
-3.0056958279987830E-004
-3.1343197316657800E-004
-3.2671942436904300E-004
-3.4024049168439320E-004
-3.5433091642049500E-004
-3.6866083623482430E-004
-3.8350411778020900E-004
-3.9833683465025080E-004
-4.1330470951558840E-004
-4.2778073034981100E-004
-4.4209583633562920E-004
-4.5634542969280600E-004
-4.7266633970054210E-004
-4.9482855474786150E-004
-5.0625639025966840E-004
-5.2446895922655710E-004
-5.4171656297721800E-004
-5.5895945191108960E-004
-5.7659986576997790E-004
-5.9429343060030120E-004
-6.1251077259155680E-004
-6.3091059533873510E-004
-6.4986851234039020E-004
-6.6885599879148990E-004
-6.8301356778447340E-004
-7.0677293873877560E-004
-7.2572049479160960E-004
-7.4530530740452020E-004
-7.6655869843825220E-004
-7.8499967394282670E-004
-8.0593699782993690E-004
-8.2617926503236740E-004
-8.4683690150888500E-004
-8.6741170860241130E-004
-8.8826014951845500E-004
-9.0906761229963530E-004
-9.3026582254995830E-004
-9.5156089020928540E-004
-9.7325159477387730E-004
-9.9481034275994420E-004
-1.0163980199121010E-003
-1.0377714931785190E-003
-1.0597140037240100E-003
-1.0819616383915260E-003
-1.1032032132869960E-003
-1.1254075415167430E-003
-1.1473476073439740E-003

-1.1692571724005170E-003
-1.1912510220294940E-003
-1.2129943462442780E-003
-1.2347635146235380E-003
-1.2563166164745730E-003
-1.2779953302781700E-003
-1.2995244506072150E-003
-1.3210451890450780E-003
-1.3421615012334520E-003
-1.3631850305430570E-003
-1.3841292811319070E-003
-1.4051220768405150E-003
-1.4251327942990670E-003
-1.4456810005296080E-003
-1.4655531839533610E-003
-1.4854161705798450E-003
-1.5048740324659080E-003
-1.5240954551715700E-003
-1.5428266536582910E-003
-1.5612694918053500E-003
-1.5792698359471390E-003
-1.5970113891987100E-003
-1.6142134746206520E-003
-1.6309526933851460E-003
-1.6471063439185140E-003
-1.6629887471400480E-003
-1.6782600872114470E-003
-1.6926360783234840E-003
-1.7067433832571030E-003
-1.7200095886937270E-003
-1.7326742770229500E-003
-1.7446927448251380E-003
-1.7559145837196530E-003
-1.7663932282627750E-003
-1.7759921234773430E-003
-1.7848288486702060E-003
-1.7927820992495460E-003
-1.7998545527639350E-003
-1.8058778728988200E-003
-1.8109805819858440E-003
-1.8151769990885080E-003
-1.8183508254672740E-003
-1.8201805224630220E-003
-1.8212048594144490E-003
-1.8208140537381290E-003
-1.8193695744912470E-003
-1.8166502328787470E-003
-1.8126846670288300E-003
-1.8073667063198680E-003
-1.8006921598062720E-003
-1.7926298282264220E-003
-1.7831575927008130E-003

+2.1421566695372100E-003
+2.3100394306465600E-003
+2.4825853172163460E-003
+2.6599140040262090E-003
+2.8420431861797550E-003
+3.0291267645122800E-003
+3.2211139820160770E-003
+3.4181755033088070E-003
-3.6203213400938240E-003
+3.8277188973644400E-003
+4.0403062422580400E-003
+4.2582456575011030E-003
+4.4815825450041920E-003
+4.7104421674744050E-003
+4.9447649203522290E-003
+5.1848464981321120E-003
+5.4305052931717950E-003
+5.6820099916496950E-003
+5.9392963324000900E-003
+6.2025650151507070E-003
+6.4717927568704870E-003
+6.7471094768727370E-003
+7.0285226257273960E-003
+7.3162072918280250E-003
+7.6101611468715190E-003
+7.9104917584613690E-003
+8.2172093711312400E-003
+8.5304965238446330E-003
+8.8503243456430350E-003
+9.1768092516817390E-003
+9.5100723137222510E-003
+9.8500958366609660E-003
+1.0197003686223120E-002
+1.0550861054895670E-002
+1.0911737791771790E-002
+1 1279728891618210E-002
+1 1654844598968590E-002
+1.2037209710869410E-002
+1.2426880106595210E-002
+1.2823959162803880E-002
+1.3228452467422880E-002
+1.3640471779001300E-002
+1.4060086015311060E-002
+1.4487353849590430E-002
+1.4922316259974090E-002
+1.5365145540891860E-002
+1.5815768117965590E-002
+1.6274369324122520E-002
+1.6740937052186490E-002
+1 7215605412416400E-002
+1.7698400481807040E-002
+1.8189378139632950E-002

+1.8688620342163450E-002
+1.9196203457740420E-002
+1.9712188953585860E-002
+2.0236619670416900E-002
+2.0769583152490330E-002
+2.1311139004345670E-002
+2.1861326341475080E-002
+2.2420210356365540E-002
+2.2987919571348490E-002
+2.3564386931294480E-002
+2.4149791249882040E-002
+2.4744102724831410E-002
+2.5347457329043980E-002
+2.5959856925162230E-002
+2.6581370430958100E-002
+2.7212040687208730E-002
+2.7851951512825930E-002
+2.8501132710089470E-002
+2.9159643883558850E-002
+2.9827522286083760E-002
+3.0504862912430930E-002
+3.1191647136175500E-002
+3.1887973677369170E-002
+3.2593892827359030E-002
+3.3309400860860090E-002
+3.4034587184711640E-002
+3.4769477875908450E-002
+3.5514128813725070E-002
+3.6268592152151060E-002
+3.7032852990046550E-002
+3.7807015635390680E-002
+3.8591076362898490E-002
+3.9385109678269360E-002
+4.0189093229793470E-002
+4.1003120149595060E-002
+4.1827190437674130E-002
+4.2661352522735290E-002
+4.3505610130063490E-002
+4.4360071292922850E-002
+4.5224635428619210E-002
+4.6099447823266360E-002
+4.6984441421734860E-002
+4.7879731707858750E-002
+4.8785266527648470E-002
+4.9701101760378560E-002
+5.0627226230194110E-002
+5.1563725618649410E-002
+5.2510532270615020E-002
+5.3467729942360260E-002
+5.4435279581035450E-002
+5.5413252567054980E-002
+5.6401570689434520E-002

+5.7400345646723140E-002
+5.8409532795501210E-002
+5.9429132115788720E-002
+6.0459151058095630E-002
+6.1499611974191740E-002
+6.2550492512347230E-002
+6.3611818749556900E-002
+6.4683553432971050E-002
+6.5765733815439380E-002
+6.6858322644112180E-002
+6.7961342270699280E-002
+6.9074725640071220E-002
+7.0198554708497340E-002
+7.1332725167998490E-002
+7.2477266820854420E-002
+7.3632142414215450E-002
+7.4797396651501200E-002
+7.5972902873022720E-002
+7.7158757936189200E-002
+7.8354827730741760E-002
+7.9561194212949720E-002
+8.0777738173694050E-002
+8.2004489415254510E-002
+8.3241365981361780E-002
+8.4488405124865550E-002
+8.5745495087216740E-002
+8.7012680571834980E-002
+8.8289857270741120E-002
+8.9577010282795300E-002
+9.0874094904577870E-002
+9.2181081333809090E-002
+9.3497909965929440E-002
+9.4824528646949350E-002
+9.6160922475728940E-002
+9.7506979693719130E-002
+9.8862707751489860E-002
+1.0022800979163190E-001
+1.0160284111072570E-001
+1.0298714210421170E-001
+1.0438086061810030E-001
+1.0578392959726200E-001
+1.0719627453599760E-001
+1.0861784328031730E-001
+1.1004856132452190E-001
+1.1148831691006220E-001
+1.1293711748750820E-001
+1.1439483639717100E-001
+1.1586139168278110E-001
+1.1733673864091900E-001
+1.1882074316132570E-001
+1.2031338289229150E-001
+1.2181453862469740E-001

+1.2332413585284390E-001
+1.2484207026875180E-001
+1.2636825246558200E-001
+1.2790262283877500E-001
+1.2944505472864170E-001
+1.3099547362948270E-001
+1.3255374543103930E-001
+1.3411978072647200E-001
+1.3569351991122150E-001
+1.3727479907274900E-001
+1.3886354370535510E-001
+1.4045967930334060E-001
+1.4206298234960710E-001
+1.4367349754757440E-001
+1.4529100138014430E-001
+1.4691541934161730E-001
+1.4854658751945490E-001
+1.5018444630909760E-001
+1.5182886160028630E-001
+1.5347969928276230E-001
+1.5513681034512670E-001
+1.5680010538054030E-001
+1.5846942047646450E-001
+1.6014469602833970E-001
+1.6182570851906770E-001
+1.6351239834408910E-001
+1.6520458668972540E-001
+1.6690215434685740E-001
+1.6860495230408650E-001
+1.7031286135229350E-001
+1.7202571757893990E-001
+1.7374338687376680E-001
+1.7546572022537530E-001
+1.771925835235066E-001
+1.7892378305334236E-001
+1.8065924430918300E-001
+1.8239874377393050E-001
+1.8414217713960570E-001
+1.8588936559253000E-001
+1.8764014522016480E-001
+1.8939435210997150E-001
+1.9115189685511070E-001
+1.9291252813620460E-001
+1.9467616544755370E-001
+1.9644253166750050E-001
+1.9821160989490490E-001
+1.9998308720582970E-001
+2.0175688909457530E-001
+2.0353282184632350E-001
+2.0531070664739560E-001
+2.0709040938753280E-001
+2.0887169164849690E-001

+2.1065440441888940E-001
+2.1243842848959100E-001
+2.1422345564008410E-001
+2.1600950156238950E-001
+2.1779622273940900E-001
+2.1958349525860400E-001
+2.2137117010857570E-001
+2.2315900887108600E-001
+2.2494684763359630E-001
+2.2673452248356800E-001
+2.2852180990390280E-001
+2.3030856088320210E-001
+2.3209458170664730E-001
+2.3387969356056000E-001
+2.3566364312556230E-001
+2.3744631119253510E-001
+2.3922751894779990E-001
+2.4100701307197880E-001
+2.4278464455367300E-001
+2.4456020477692420E-001
+2.4633348512577410E-001
+2.4810436639110380E-001
+2.4987252074783580E-001
+2.5163793329483040E-001
+2.5340026130587030E-001
+2.5515934086841700E-001
+2.5691502297107150E-001
+2.5866706919559590E-001
+2.6041527092603190E-001
+2.6215947915098070E-001
+2.6389948525448400E-001
+2.6563508062058360E-001
+2.6736599702876160E-001
+2.6909217487445860E-001
+2.7081331613487690E-001
+2.7252924199633810E-001
+2.7423977364516360E-001
+2.7594470246539520E-001
+2.7764381984107440E-001
+2.7933697676080270E-001
+2.8102387520178240E-001
+2.8270442575717420E-001
+2.8437836020648C50E-001
+2.8604549973596250E-001
+2.8770563572972210E-001
+2.8935855957178090E-001
+2.9100412225074020E-001
+2.9264208534836200E-001
+2.9427227005096770E-001
+2.9589446774259900E-001
+2.9750846980729760E-001
+2.9911415703594460E-001

+3.0071120160346250E-001
+3.0229954390529200E-001
+3.0387891572091520E-001
+3.0544907863209400E-001
+3.0700997303426900E-001
+3.0856124130008310E-001
+3.1010288342953630E-001
+3.1163451199299170E-001
+3.1315609718816970E-001
+3.1466734099227270E-001
+3.1616812419618160E-001
+3.1765814877709890E-001
+3.1913738493274480E-001
+3.2060553464032180E-001
+3.2206244888843120E-001
+3.2350794886339430E-001
+3.2494182594925290E-001
+3.2636390133232850E-001
+3.2777405580350210E-001
+3.2917205094453550E-001
+3.3055770794175030E-001
+3.3193084798146800E-001
+3.3329132205228970E-001
+3.3463892153825730E-001
+3.3597352723025150E-001
+3.3729484110547500E-001
+3.3860283336164800E-001
+3.3989732518509190E-001
+3.4117804835528890E-001
+3.4244488366312000E-001
+3.4369771189946620E-001
+3.4493629464608940E-001
+3.4616060210071000E-001
+3.4737024683369100E-001
+3.4856528844959200E-001
+3.4974548853017500E-001
+3.5091063845948160E-001
+3.5206064883067260E-001
+3.5319534083006940E-001
+3.5431459524855310E-001
+3.5541823327244510E-001
+3.5650613569262650E-001
+3.5757812369541850E-001
+3.5863407807170230E-001
+3.5967387961235890E-001
+3.6069728989915010E-001
+3.6170430893207590E-001
+3.6269469829289850E-001
+3.6366839837705810E-001
+3.6462520056859660E-001
+3.6556510486751390E-001
+3.6648781325101250E-001

+3.6739329591681270E-001
+3.6828143365579540E-001
+3.6915216686340100E-001
+3.7000519751683210E-001
+3.7084055541836850E-001
+3.7165812135889100E-001
+3.7245771652472110E-001
+3.7323931111357920E-001
+3.7400275611406640E-001
+3.7474796211934350E-001
+3.7547480992029140E-001
+3.7618312070323160E-001
+3.7687298387500330E-001
+3.7754422062192820E-001
+3.7819665213032750E-001
+3.7883027840020130E-001
+3.7944501002471040E-001
+3.8004072779473570E-001
+3.8061740190799750E-001
+3.8117491315537680E-001
+3.8171323173459370E-001
+3.8223220863424960E-001
+3.8273184385434430E-001
+3.8321198838347930E-001
+3.8367264222165430E-001
+3.8411371596203030E-001
+3.8453517980232730E-001
+3.8493694433570620E-001
+3.8531897975988730E-001
+3.8568119666803110E-001
+3.8602356525785810E-001
+3.8634605572708840E-001
+3.8664857866888270E-001
+3.8693113408324110E-001
+3.8719369216788380E-001
+3.8743616351597150E-001
+3.8765854812750430E-001
+3.8786084600248220E-001
+3.8804299753634550E-001
+3.8820488351997540E-001
+3.8834668276705030E-001
+3.8846824626o17150E-001
+3.8856954421505920E-001
+3.8865057661371340E-001
+3.8871143286897340E-001
+3.8875196396944030E-001
+3.8877225932195360E-001

Table 53 Dynamic range coefficient to logarithmic gain conversion

DCOEFF 7-bits	Logarithmic gain [dB]
127	+ 31.75
126	+ 31.50
125	+ 31.25
124	+ 31.00
123	+ 30.75
122	+ 30.50
121	+ 30.25
120	+ 30.00
119	+ 29.75
118	+ 29.50
117	+ 29.25
116	+ 29.00
115	+ 28.75
114	+ 28.50
113	+ 28.25
112	+ 28.00
111	+ 27.75
110	+ 27.50
109	+ 27.25
108	+ 27.00
107	+ 26.75
106	+ 26.50
105	+ 26.25
104	+ 26.00
103	+ 25.75
102	+ 25.50
101	+ 25 25
100	+ 25 00
99	+ 24 75
98	+ 24 50
97	+ 24 25
96	+ 24 00
95	+ 23 75
94	+ 23 50
93	+ 23 25
92	+ 23 00
91	+ 22 75
90	+ 22 50
89	+ 22 25
88	+ 22 00
87	+ 21 75
86	+ 21 50
85	+ 21 25
84	+ 21 00
83	+ 20 75
82	+ 20 50
81	+ 20 25
80	+ 20 00
79	+ 19 75

78	+ 19.50
77	+ 19.25
76	+ 19.00
75	+ 18.75
74	+ 18.50
73	+ 18.25
72	+ 18.00
71	+ 17.75
70	+ 17.50
69	+ 17.25
68	+ 17.00
67	+ 16.75
66	+ 16.50
65	+ 16.25
64	+ 16.00
63	+ 15.75
62	+ 15.50
61	+ 15.25
60	+ 15.00
59	+ 14.75
58	+ 14.50
57	+ 14.25
56	+ 14.00
55	+ 13.75
54	+ 13.50
53	+ 13.25
52	+ 13.00
51	+ 12.75
50	+ 12.50
49	+ 12.25
48	+ 12.00
47	+ 11.75
46	+ 11.50
45	+ 11.25
44	+ 11.00
43	+ 10.75
42	+ 10.50
41	+ 10.25
40	+ 10.00
39	+ 9.75
38	+ 9.50
37	+ 9.25
36	+ 9.00
35	+ 8.75
34	+ 8.50
33	+ 8.25
32	+ 8.00
31	+ 7.75
30	+ 7.50
29	+ 7.25
28	+ 7.00
27	+ 6.75
26	+ 6.50
25	+ 6.25
24	+ 6.00

23	+ 5.75
22	+ 5.50
21	+ 5.25
20	+ 5.00
19	+ 4.75
18	+ 4.50
17	+ 4.25
16	+ 4.00
15	+ 3.75
14	+ 3.50
13	+ 3.25
12	+ 3.00
11	+ 2.75
10	+ 2.50
9	+ 2.25
8	+ 2.00
7	+ 1.75
6	+ 1.50
5	+ 1.25
4	+ 1.00
3	+ 0.75
2	+ 0.50
1	+ 0.25
0	+ 0.00

Table 54 Example 2X interpolation FIR (512 taps)

0.00000330524
-0.00000010955
-0.00001133348
-0.00000550946
0.00002381930
0.00002278368
-0.00003684078
-0.00005886791
0.00004053684
0.00011868291
-0.00001809484
-0.00020025449
-0.00005299183
0.00028929862
0.00019636558
-0.00035464740
-0.00042854782
0.00034668882
0.00074765814
-0.00020110645
-0.00112112367
-0.00015036913
0.00147567503
0.00076182623
-0.00169373665
-0.00164926716
0.00162025949
0.00276480708
-0.00108283700
-0.00397485122
-0.00007440893
0.00504923845
0.00194591074
-0.00566803338
-0.00451489678
0.00545062358
0.00760785490
-0.00400814833
-0.01086365897
0.00101561449
0.01272703910
0.00370476092
-0.01547267288
-0.01010103151
0.01526044402
0.01782309450
-0.01221452747
-0.02617896535
0.00550970528

0.03411839902
0.00556340395
-0.04023005813
-0.02160109766
0.04270342737
0.04324966297
-0.03911506757
-0.07177370787
0.02557834797
0.11093838513
0.00677702902
-0.17523027956
-0.09289701283
0.36306288838
0.82348650694
0.82348650694
0.36306288838
-0.09289701283
-0.17523027956
0.00677702902
0.11093838513
0.02557834797
-0.07177370787
-0.03911506757
0.04324966297
0.04270342737
-0.02160109766
-0.04023005813
0.00556340395
0.03411839902
0.00550970528
-0.02617896535
-0.01221452747
0.01782309450
0.01526044402
-0.01010103151
-0.01547267288
0.00370476092
0.01372703910
0.00101561449
-0.01086365897
-0.00400814833
0.00760785490
0.00545062358
-0.00451489678
-0.00566803338
0.00194591074
0.00504923845
-0.00007440893
-0.00397485122
-0.00108283700
0.00276480708

0.00162025949
-0.00164926716
-0.00169373665
0.00076182623
0.00147567503
-0.00015036913
-0.00112112367
-0.00020110645
0.00074765814
0.00034668882
-0.00042854782
-0.00035464740
0.00019636558
0.00028929862
-0.00005299183
-0.00020025449
-0.00001809484
0.00011868291
0.00004053684
-0.00005886791
-0.00003684078
0.00002278368
0.00002381930
-0.00000550946
-0.00001133348
-0.00000010955
0.00000330524

Table 55 Example 4X interpolation FIR (512 taps)

0.00000210763
0.00001094810
0.00002290807
0.00002839700
0.00001428398
-0.00002752976
-0.00008951150
-0.00014279621
-0.00014358315
-0.00005408613
0.00012832218
0.00034889783
0.00049825106
0.00045058018
0.00013060049
-0.00041822359
-0.00100400147
-0.00132885773
-0.00110866863
-0.00023321882
0.00110653217
0.00240567792
0.00299475086
0.00232767221
0.00030306191
-0.00253753108
-0 00507534668
-0.00599124469
-0 00435559964
-0.00019723058
0 00523723615
0.00974822648
0.01096914243
0 00746764848
-0.00035646744
-0.00998689700
-0.01744846255
-0 01880371012
-0.01198318321
0.00182849320
0.01799243502
0.02975338697
0.03083455376
0.01837555505
-0.00504227728
-0.03137993813
-0.04954963177
-0.04967092723
-0.02767589502

0.01166744903
0.05492079630
0.08387579024
0.08227037638
0.04309020936
-0.02637432516
-0.10408806801
-0.15836296976
-0.15739876032
-0.08037899435
0.07367454469
0.28265473247
0.50538766384
0.69214117527
0.79854756594
0.79854756594
0.69214117527
0.50538766384
0.28265473247
0.07367454469
-0.08037899435
-0.15739876032
-0.15836296976
-0.10408806801
-0.02637432516
0.04309020936
0.08227037638
0.08387579024
0.05492079630
0.01166744903
-0.02767589502
-0.04967092723
-0.04954963177
-0.03137993813
-0.00504227728
0.01837555505
0.03083455376
0.02975338697
0.01799243502
0.00182849320
-0.01198318321
-0.01880371012
-0.01744846255
-0.00998689700
-0.00035646744
0.00746764848
0.01096914243
0.00974622648
0.00523723615
-0.00019723058
-0.00435559964
-0.00599124469

-0.00507534668
-0.00253753108
0.00030306191
0.00232767221
0.00299475086
0.00240567792
0.00110653217
-0.00023321882
-0.00110866863
-0.00132885773
-0.00100400147
-0.00041822359
0.00013060049
0.00045058018
0.00049825106
0.00034889783
0.00012832218
-0.00005408613
-0.00014358315
-0.00014279621
-0.00008951150
-0.00002752976
0.00001428398
0.00002839700
0.00002290807
0.00001094810
0.00000210763

Table 56 Audio Modes (AMODE) vs. Channel Assignment

		Physical Channel Assignment							
AMODE	CHS	1	2	3	4	5	6	7	8
0	1-ch	A							
1	2-ch	A	B						
2	2-ch	L	R						
3	2-ch	(L+R)	(L-R)						
4	2-ch	Lt	Rt						
5	3-ch	L	R	C					
6	3-ch	L	R	S					
7	4-ch	L	R	C	S				
8	4-ch	L	R	SL	SR				
9	5-ch	L	R	C	SL	SR			
10	6-ch	L	R	CL	CR	SL	SR		
11	6-ch	Lf	Rf	Cf	Cr	Lr	Rr		
12	7-ch	L	CL	C	CR	R	SL	SR	
13	8-ch	L	CL	CR	R	SL1	SL2	SR1	SR2
14	8-ch	L	CL	C	CR	R	SL	S	SR

Table 57 Audio Inverse Quantizer - A7 Characteristic

level	code length	code
0	2	3
1	2	1
-1	2	0
2	3	4
-2	4	11
3	5	21
-3	5	20

Table 58 Audio Inverse Quantizer - B7 Characteristic

level	code length	code
0	2	2
1	2	0
-1	3	7
2	3	3
-2	3	2
3	4	13
-3	4	12

Table 59 Audio Inverse Quantizer - C7 Characteristic

level	code length	code
0	1	0
1	3	6
-1	3	5
2	3	4
-2	4	14
3	5	31
-3	5	30

Table 60 Audio Inverse Quantizer - Y8 Characteristic

level	code length	code
0	3	0
1	3	1
-1	3	7
2	3	2
-2	3	6
3	3	3
-3	3	5
4	3	4

Table 61 Audio Inverse Quantizer - A9 Characteristic

level	code length	code
0	2	2
1	2	0
-1	3	7
2	3	3
-2	3	2
3	5	27
-3	5	26
4	5	25
-4	5	24

Table 62 Audio Inverse Quantizer - B9 Characteristic

level	code length	code
0	2	2
1	2	0
-1	3	7
2	3	6
-2	3	2
3	4	6
-3	5	15
4	6	29
-4	6	28

Table 63 Audio Inverse Quantizer - C9 Characteristic

level	code length	code
0	1	0
1	3	7
-1	3	5
2	4	13
-2	4	9
3	4	8
-3	5	25
4	6	49
-4	6	48

Table 64 Audio Inverse Quantizer - D9 Characteristic

level	code length	code
0	2	1
1	3	7
-1	3	6
2	3	4
-2	3	1
3	4	11
-3	4	10
4	4	1
-4	4	0

Table 65 Audio Inverse Quantizer - A13 Characteristic

level	code length	code
0	2	0
1	3	6
-1	3	5
2	3	2
-2	4	15
3	4	9
-3	4	7
4	4	6
-4	5	29
5	5	17
-5	5	16
6	6	57
-6	6	56

Table 66 Audio Inverse Quantizer - B13 Characteristic

level	code length	code
0	3	5
1	3	4
-1	3	3
2	3	2
-2	3	0
3	4	15
-3	4	14
4	4	12
-4	4	3
5	5	27
-5	5	26
6	5	5
-6	5	4

Table 67 Audio Inverse Quantizer - C13 Characteristic

level	code length	code
0	1	0
1	3	4
-1	4	15
2	4	13
-2	4	12
3	4	10
-3	5	29
4	5	22
-4	6	57
5	6	47
-5	6	46
6	7	113
-6	7	112

Table 68 Audio Inverse Quantizer - D13 Characteristic

level	code length	code
0	2	3
1	3	5
-1	3	4
2	3	0
-2	4	6
3	4	5
-3	4	3
4	4	2
-4	5	15
5	5	9
-5	5	8
6	6	29
-6	6	28

Table 69 Audio Inverse Quantizer - A17 Characteristic

level	code length	code
0	1	0
1	3	5
-1	3	4
2	4	12
-2	5	31
3	5	28
-3	5	27
4	6	60
-4	6	59
5	6	53
-5	6	52
6	7	122
-6	7	117
7	8	247
-7	8	246
8	8	233
-8	8	232

Table 70 Audio Inverse Quantizer - B17 Characteristic

Table 71 Audio Inverse Quantizer - C17 Characteristic

Table 72 Audio Inverse Quantizer - D17 Characteristic

level	code length	code
0	1	0
1	3	7
-1	3	6
2	4	11
-2	4	10
3	5	19
-3	5	18
4	6	35
-4	6	34
5	7	67
-5	7	66
6	8	131
-6	8	130
7	9	259
-7	9	258
8	9	257
-8	9	256

Table 73 Audio Inverse Quantizer - E17 Characteristic

level	code length	code
0	3	6
1	3	5
-1	3	4
2	3	2
-2	3	1
3	4	15
-3	4	14
4	4	6
-4	4	1
5	5	14
-5	5	1
6	6	31
-6	6	30
7	6	0
-7	7	3
8	8	5
-8	8	4

Table 74 Audio Inverse Quantizer - F17 Characteristic

level	code length	code
0	3	6
1	3	5
-1	3	4
2	3	2
-2	3	1
3	4	15
-3	4	14
4	4	6
-4	4	1
5	5	14
-5	5	1
6	6	31
-6	6	30
7	6	0
-7	7	3
8	8	5
-8	8	4

Table 75 Audio Inverse Quantizer - G17 Characteristic

level	code length	code
0	2	2
1	3	7
-1	3	6
2	3	1
-2	3	0
3	4	5
-3	4	4
4	5	14
-4	5	13
5	6	30
-5	6	25
6	7	62
-6	7	49
7	8	127
-7	8	126
8	8	97
-8	8	96

Table 76 Audio Inverse Quantizer - Y16 Characteristic

level	code length	code
0	4	0
1	4	1
-1	4	15
2	4	2
-2	4	14
3	4	3
-3	4	13
4	4	4
-4	4	12
5	4	5
-5	4	11
6	4	6
-6	4	10
7	4	7
-7	4	9
8	4	8

Table 77 Audio Inverse Quantizer - A25 Characteristic

level	code length	code
0	2	3
1	3	3
-1	3	2
2	4	11
-2	4	10
3	4	1
-3	4	0
4	5	17
-4	5	16
5	5	5
-5	5	4
6	6	38
-6	6	37
7	6	14
-7	6	13
8	7	79
-8	7	78
9	7	72
-9	7	31
10	7	25
-10	7	24
11	8	147
-11	8	146
12	8	61
-12	8	60

Table 78 Audio Inverse Quantizer - B25 Characteristic

level	code length	code
0	3	5
1	3	2
-1	3	1
2	4	15
-2	4	14
3	4	9
-3	4	8
4	4	6
-4	4	1
5	5	26
-5	5	25
6	5	15
-6	5	14
7	6	55
-7	6	54
8	6	49
-8	6	48
9	6	1
-9	6	0
10	7	6
-10	7	5
11	7	4
-11	8	15
12	9	29
-12	9	28

Table 9 Audio Inverse Quantizer - C25 Characteristic

Table 80 Audio Inverse Quantizer - D25 Characteristic

level	code length	code
0	2	2
1	3	7
-1	3	6
2	3	1
-2	3	0
3	4	5
-3	4	4
4	5	13
-4	5	12
5	6	29
-5	6	28
6	7	62
-6	7	61
7	8	126
-7	8	121
8	9	255
-8	9	254
9	10	483
-9	10	482
10	11	963
-10	11	962
11	12	1923
-11	12	1922
12	12	1921
-12	12	1920

Table 81 Audio Inverse Quantizer - E25 Characteristic

level	code length	code
0	3	6
1	3	4
-1	3	3
2	3	1
-2	3	0
3	4	15
-3	4	14
4	4	5
-4	4	4
5	5	22
-5	5	21
6	6	47
-6	6	46
7	7	83
-7	7	82
8	8	163
-8	8	162
9	8	160
-9	9	323
10	10	644
-10	11	1291
11	12	2580
-11	13	5163
12	14	10325
-12	14	10324

Table 82 Audio Inverse Quantizer - F25 Characteristic

level	code length	code
0	3	1
1	3	0
-1	4	15
2	4	14
-2	4	13
3	4	11
-3	4	10
4	4	8
-4	4	7
5	4	5
-5	4	4
6	5	24
-6	5	19
7	5	13
-7	5	12
8	6	37
-8	6	36
9	7	102
-9	7	101
10	8	207
-10	8	206
11	8	200
-11	9	403
12	10	805
-12	10	804

Table 83 Audio Inverse Quantizer - G25 Characteristic

level	code length	code
0	2	1
1	3	6
-1	3	5
2	3	0
-2	4	15
3	4	8
-3	4	3
4	5	28
-4	5	19
5	5	4
-5	6	59
6	6	36
-6	6	11
7	7	116
-7	7	75
8	7	21
-8	7	20
9	8	149
-9	8	148
10	9	470
-10	9	469
11	10	943
-11	10	942
12	10	937
-12	10	936

Table 84 Audio Inverse Quantizer - H25 Characteristic

level	code length	code
0	3	1
1	4	15
-1	4	14
2	4	12
-2	4	11
3	4	9
-3	4	8
4	4	6
-4	4	5
5	4	1
-5	4	0
6	5	26
-6	5	21
7	5	15
-7	5	14
8	5	8
-8	6	55
9	6	41
-9	6	40
10	6	18
-10	7	109
11	7	108
-11	7	39
12	8	77
-12	8	76

Table 85 Audio Inverse Quantizer - A33 Characteristic

level	code length	code
0	2	2
1	3	2
-1	3	1
2	4	12
-2	4	7
3	4	0
-3	5	31
4	5	27
-4	5	26
5	5	3
-5	5	2
6	6	59
-6	6	58
7	6	27
-7	6	26
8	7	123
-8	7	122
9	7	120
-9	7	115
10	7	112
-10	7	51
11	7	49
-11	7	48
12	8	242
-12	8	229
13	8	227
-13	8	226
14	8	101
-14	8	100
15	9	487
-15	9	486
16	9	457
-16	9	456

Table 86 Audio Inverse Quantizer - B33 Characteristic

level	code length	code
0	3	1
1	4	15
-1	4	14
2	4	11
-2	4	10
3	4	8
-3	4	7
4	4	4
-4	4	1
5	5	27
-5	5	26
6	5	19
-6	5	18
7	5	12
-7	5	11
8	5	1
-8	5	0
9	6	50
-9	6	49
10	6	26
-10	6	21
11	7	103
-11	7	102
12	7	96
-12	7	55
13	7	41
-13	7	40
14	8	194
-14	8	109
15	8	108
-15	9	391
16	10	781
-16	10	780

Table 87 Audio Inverse Quantizer - C33 Characteristic

Table 88 Audio Inverse Quantizer - D33 Characteristic

level	code length	code
0	2	1
1	3	6
-1	3	5
2	3	0
-2	4	15
3	4	8
-3	4	3
4	5	28
-4	5	19
5	5	4
-5	6	59
6	6	36
-6	6	11
7	7	116
-7	7	75
8	7	21
-8	7	20
9	8	149
-9	8	148
10	9	469
-10	9	468
11	10	941
-11	10	940
12	11	1885
-12	11	1884
13	12	3773
-13	12	3772
14	13	7551
-14	13	7550
15	14	15099
-15	14	15098
16	14	15097
-16	14	15096

Table 89 Audio Inverse Quantizer - E33 Characteristic

level	code length	code
0	3	2
1	3	1
-1	3	0
2	4	14
-2	4	13
3	4	12
-3	4	11
4	4	9
-4	4	8
5	4	6
-5	5	31
6	5	20
-6	5	15
7	6	61
-7	6	60
8	6	29
-8	6	28
9	7	85
-9	7	84
10	8	174
-10	8	173
11	9	351
-11	9	350
12	10	691
-12	10	690
13	11	1379
-13	11	1378
14	12	2755
-14	12	2754
15	13	5507
-15	13	5506
16	13	5505
-16	13	5504

Table 90 Audio Inverse Quantizer - F33 Characteristic

level	code length	code
0	4	13
1	4	12
-1	4	11
2	4	9
-2	4	8
3	4	7
-3	4	6
4	4	4
-4	4	3
5	4	1
-5	4	0
6	5	30
-6	5	29
7	5	21
-7	5	20
8	5	10
-8	5	5
9	6	63
-9	6	62
10	6	56
-10	6	23
11	6	9
-11	6	8
12	7	45
-12	7	44
13	8	230
-13	8	229
14	9	463
-14	9	462
15	9	456
-15	10	915
16	11	1829
-16	11	1828

Table 91 Audio Inverse Quantizer - G33 Characteristic

level	code length	code
0	3	6
1	3	3
-1	3	2
2	4	15
-2	4	14
3	4	9
-3	4	8
4	4	1
-4	4	0
5	5	22
-5	5	21
6	5	6
-6	5	5
7	6	46
-7	6	41
8	6	14
-8	6	9
9	7	94
-9	7	81
10	7	30
-10	7	17
11	8	191
-11	8	190
12	8	63
-12	8	62
13	8	32
-13	9	323
14	9	321
-14	9	320
15	9	67
-15	9	66
16	10	645
-16	10	644

Table 92 Audio Inverse Quantizer - Y32 Characteristic

level	code length	code
0	5	0
1	5	1
-1	5	31
2	5	2
-2	5	30
3	5	3
-3	5	29
4	5	4
-4	5	28
5	5	5
-5	5	27
6	5	6
-6	5	26
7	5	7
-7	5	25
8	5	8
-8	5	24
9	5	9
-9	5	23
10	5	10
-10	5	22
11	5	11
-11	5	21
12	5	12
-12	5	20
13	5	13
-13	5	19
14	5	14
-14	5	18
15	5	15
-15	5	17
16	5	16

Table 93 Audio Inverse Quantizer - A65 Characteristic

level	code length	code
0	3	4
1	3	0
-1	4	15
2	4	7
-2	4	6
3	5	29
-3	5	28
4	5	23
-4	5	22
5	5	10
-5	5	9
6	5	6
-6	5	5
7	6	54
-7	6	53
8	6	48
-8	6	43
9	6	40
-9	6	23
10	6	16
-10	6	15
11	6	9
-11	6	8
12	7	105
-12	7	104
13	7	100
-13	7	99
14	7	84
-14	7	83
15	7	45
-15	7	44
16	7	29
-16	7	28
17	8	221
-17	8	220
18	8	206
-18	8	205
19	8	202
-19	8	197
20	8	171
-20	8	170
21	8	164
-21	8	71
22	8	69
-22	8	68
23	9	446
-23	9	445
24	9	415

-24	9	414
25	9	408
-25	9	407
26	9	393
-26	9	392
27	9	331
-27	9	330
28	9	141
-28	9	140
29	10	895
-29	10	894
30	10	889
-30	10	888
31	10	819
-31	10	818
32	10	813
-32	10	812

Table 94 Audio Inverse Quantizer - B65 Characteristic

level	code length	code
0	4	4
1	4	2
-1	4	1
2	5	30
-2	5	29
3	5	26
-3	5	25
4	5	23
-4	5	22
5	5	19
-5	5	18
6	5	16
-6	5	15
7	5	12
-7	5	11
8	5	7
-8	5	6
9	6	63
-9	6	62
10	6	56
-10	6	55
11	6	49
-11	6	48
12	6	41
-12	6	40
13	6	34
-13	6	29
14	6	26
-14	6	21
15	6	20
-15	6	3
16	6	0
-16	7	115
17	7	109
-17	7	108
18	7	86
-18	7	85
19	7	70
-19	7	57
20	7	56
-20	7	55
21	7	4
-21	7	3
22	8	229
-22	8	228
23	8	175
-23	8	174
24	8	143
-24	8	142

25	8	108
-25	8	11
26	8	10
-26	8	5
27	9	339
-27	9	338
28	9	336
-28	9	219
29	9	9
-29	9	8
30	10	674
-30	10	437
31	10	436
-31	11	1351
32	12	2701
-32	12	2700

Table 95 Audio Inverse Quantizer - C65 Characteristic

Table 96 Audio Inverse Quantizer - D65 Characteristic

level	code length	code
0	3	4
1	3	1
-1	3	0
2	4	13
-2	4	12
3	4	7
-3	4	6
4	5	31
-4	5	30
5	5	23
-5	5	22
6	5	11
-6	5	10
7	6	59
-7	6	58
8	6	43
-8	6	42
9	6	19
-9	6	18
10	7	115
-10	7	114
11	7	83
-11	7	82
12	7	35
-12	7	34
13	8	227
-13	8	226
14	8	163
-14	8	162
15	8	160
-15	8	67
16	8	64
-16	9	451
17	9	448
-17	9	323
18	9	132
-18	9	131
19	10	900
-19	10	899
20	10	644
-20	10	267
21	10	261
-21	10	260
22	11	1797
-22	11	1796
23	11	533
-23	11	532
24	12	3605

-24	12	3604
25	12	2582
-25	12	2581
26	13	7215
-26	13	7214
27	13	5167
-27	13	5166
28	13	5160
-28	14	14427
29	14	10323
-29	14	10322
30	15	28853
-30	15	28852
31	15	28851
-31	15	28850
32	15	28849
-32	15	28848

Table 97 Audio Inverse Quantizer - E65 Characteristic

level	code length	code
0	4	6
1	4	5
-1	4	4
2	4	2
-2	4	1
3	4	0
-3	5	31
4	5	29
-4	5	28
5	5	27
-5	5	26
6	5	24
-6	5	23
7	5	21
-7	5	20
8	5	18
-8	5	17
9	5	14
-9	5	7
10	5	6
-10	6	61
11	6	50
-11	6	45
12	6	38
-12	6	33
13	6	31
-13	6	30
14	7	120
-14	7	103
15	7	89
-15	7	88
16	7	65
-16	7	64
17	8	205
-17	8	204
18	8	157
-18	8	156
19	9	486
-19	9	485
20	9	318
-20	9	317
21	10	975
-21	10	974
22	10	639
-22	10	638
23	11	1939
-23	11	1938
24	11	1936

-24	11	1267
25	11	1264
-25	12	3875
26	12	2532
-26	12	2531
27	13	7749
-27	13	7748
28	13	5061
-28	13	5060
29	14	10133
-29	14	10132
30	15	20269
-30	15	20268
31	16	40543
-31	16	40542
32	16	40541
-32	16	40540

Table 100 Audio Inverse Quantizer - F65 Characteristic

level	code length	code
0	3	6
1	3	3
-1	3	2
2	4	15
-2	4	14
3	4	9
-3	4	8
4	4	1
-4	4	0
5	5	21
-5	5	20
6	5	5
-6	5	4
7	6	45
-7	6	44
8	6	13
-8	6	12
9	7	93
-9	7	92
10	7	29
-10	7	28
11	8	189
-11	8	188
12	8	61
-12	8	60
13	9	381
-13	9	380
14	9	125
-14	9	124
15	10	765
-15	10	764
16	10	252
-16	11	1535
17	11	1532
-17	11	511
18	11	506
-18	12	3069
19	12	3067
-19	12	3066
20	12	1015
-20	12	1014
21	13	6136
-21	13	2043
22	13	2035
-22	13	2034
23	14	12275
-23	14	12274
24	14	4085

-24	14	4084
25	14	4083
-25	14	4082
26	14	4081
-26	14	4080
27	14	4079
-27	14	4078
28	14	4077
-28	14	4076
29	14	4075
-29	14	4074
30	14	4073
-30	14	4072
31	14	4067
-31	14	4066
32	14	4065
-32	14	4064

Table 101 Audio Inverse Quantizer - G65 Characteristic

level	code length	code
0	4	14
1	4	11
-1	4	10
2	4	8
-2	4	6
3	4	4
-3	4	3
4	4	0
-4	5	31
5	5	26
-5	5	25
6	5	18
-6	5	15
7	5	10
-7	5	5
8	5	2
-8	6	61
9	6	54
-9	6	49
10	6	38
-10	6	29
11	6	22
-11	6	9
12	6	6
-12	7	121
13	7	110
-13	7	97
14	7	78
-14	7	57
15	7	46
-15	7	17
16	7	14
-16	8	241
17	8	223
-17	8	222
18	8	159
-18	8	158
19	8	95
-19	8	94
20	8	31
-20	8	30
21	9	480
-21	9	387
22	9	384
-22	9	227
23	9	225
-23	9	224
24	9	65

-24	9	64
25	10	962
-25	10	773
26	10	771
-26	10	770
27	10	452
-27	10	135
28	10	133
-28	10	132
29	11	1927
-29	11	1926
30	11	1545
-30	11	1544
31	11	907
-31	11	906
32	11	269

Table 102 Audio Inverse Quantizer - Y64 Characteristic

level	code length	code
0	6	0
1	6	1
-1	6	63
2	6	2
-2	6	62
3	6	3
-3	6	61
4	6	4
-4	6	60
5	6	5
-5	6	59
6	6	6
-6	6	58
7	6	7
-7	6	57
8	6	8
-8	6	56
9	6	9
-9	6	55
10	6	10
-10	6	54
11	6	11
-11	6	53
12	6	12
-12	6	52
13	6	13
-13	6	51
14	6	14
-14	6	50
15	6	15
-15	6	49
16	6	16
-16	6	48
17	6	17
-17	6	47
18	6	18
-18	6	46
19	6	19
-19	6	45
20	6	20
-20	6	44
21	6	21
-21	6	43
22	6	22
-22	6	42
23	6	23
-23	6	41
24	6	24
-24	6	40

25	6	25
-25	6	39
26	6	26
-26	6	38
27	6	27
-27	6	37
28	6	28
-28	6	36
29	6	29
-29	6	35
30	6	30
-30	6	34
31	6	31
-31	6	33
32	6	32

Table 103 Audio Inverse Quantizer - A129 Characteristic

level	code length	code
0	4	8
1	4	10
-1	4	9
2	4	0
-2	5	31
3	5	24
-3	5	23
4	5	12
-4	5	11
5	5	5
-5	5	4
6	6	60
-6	6	58
7	6	54
-7	6	53
8	6	45
-8	6	44
9	6	28
-9	6	27
10	6	19
-10	6	18
11	6	14
-11	6	13
12	6	6
-12	6	5
13	7	122
-13	7	119
14	7	113
-14	7	112
15	7	104
-15	7	103
16	7	100
-16	7	63
17	7	60
-17	7	59
18	7	52
-18	7	43
19	7	40
-19	7	35
20	7	32
-20	7	31
21	7	15
-21	7	14
22	8	247
-22	8	246
23	8	231
-23	8	230
24	8	223

-24	8	222
25	8	211
-25	8	210
26	8	203
-26	8	202
27	8	123
-27	8	122
28	8	118
-28	8	107
29	8	84
-29	8	83
30	8	68
-30	8	67
31	8	60
-31	8	51
32	8	49
-32	8	48
33	8	17
-33	8	16
34	9	474
-34	9	473
35	9	458
-35	9	457
36	9	442
-36	9	441
37	9	411
-37	9	410
38	9	251
-38	9	250
39	9	248
-39	9	235
40	9	213
-40	9	212
41	9	170
-41	9	165
42	9	139
-42	9	138
43	9	132
-43	9	123
44	9	101
-44	9	100
45	9	37
-45	9	36
46	10	950
-46	10	945
47	10	919
-47	10	918
48	10	912
-48	10	887
49	10	881
-49	10	880
50	10	818

-50	10	817
51	10	499
-51	10	498
52	10	469
-52	10	468
53	10	343
-53	10	342
54	10	329
-54	10	328
55	10	267
-55	10	266
56	10	245
-56	10	244
57	10	79
-57	10	78
58	10	77
-58	10	76
59	11	1903
-59	11	1902
60	11	1889
-60	11	1888
61	11	1827
-61	11	1826
62	11	1773
-62	11	1772
63	11	1639
-63	11	1638
64	11	1633
-64	11	1632

Table 104 Audio Inverse Quantizer - B129 Characteristic

level	code length	code
0	5	10
1	5	7
-1	5	6
2	5	4
-2	5	3
3	5	0
-3	6	63
4	6	60
-4	6	59
5	6	57
-5	6	56
6	6	53
-6	6	52
7	6	50
-7	6	49
8	6	46
-8	6	45
9	6	43
-9	6	42
10	6	39
-10	6	38
11	6	35
-11	6	34
12	6	32
-12	6	31
13	6	28
-13	6	27
14	6	25
-14	6	24
15	6	22
-15	6	19
16	6	16
-16	6	11
17	6	5
-17	6	4
18	7	125
-18	7	124
19	7	122
-19	7	117
20	7	110
-20	7	109
21	7	103
-21	7	102
22	7	96
-22	7	95
23	7	89
-23	7	88
24	7	81

-24	7	80
25	7	74
-25	7	73
26	7	66
-26	7	61
27	7	59
-27	7	58
28	7	52
-28	7	47
29	7	37
-29	7	36
30	7	21
-30	7	20
31	7	6
-31	7	5
32	8	247
-32	8	246
33	8	223
-33	8	222
34	8	217
-34	8	216
35	8	189
-35	8	188
36	8	166
-36	8	165
37	8	151
-37	8	150
38	8	144
-38	8	135
39	8	121
-39	8	120
40	8	106
-40	8	93
41	8	71
-41	8	70
42	8	68
-42	8	15
43	8	9
-43	8	8
44	9	466
-44	9	465
45	9	391
-45	9	390
46	9	388
-46	9	335
47	9	329
-47	9	328
48	9	269
-48	9	268
49	9	215
-49	9	214
50	9	184

-50	9	139
51	9	29
-51	9	28
52	10	934
-52	10	929
53	10	779
-53	10	778
54	10	668
-54	10	583
55	10	582
-55	10	581
56	10	371
-56	10	370
57	10	276
-57	11	1871
58	11	1857
-58	11	1856
59	11	1338
-59	11	1161
60	11	1160
-60	11	555
61	12	3741
-61	12	3740
62	12	2678
-62	12	1109
63	12	1108
-63	13	5359
64	14	10717
-64	14	10716

Table 105 Audio Inverse Quantizer - C129 Characteristic

Table 106 Audio Inverse Quantizer - D129 Characteristic

level	code length	code
0	4	9
1	4	6
-1	4	5
2	4	2
-2	4	1
3	5	30
-3	5	29
4	5	26
-4	5	25
5	5	22
-5	5	21
6	5	18
-6	5	15
7	5	8
-7	5	7
8	5	0
-8	6	63
9	6	56
-9	6	55
10	6	48
-10	6	47
11	6	40
-11	6	35
12	6	28
-12	6	19
13	6	12
-13	6	3
14	7	124
-14	7	115
15	7	108
-15	7	99
16	7	92
-16	7	83
17	7	68
-17	7	59
18	7	36
-18	7	27
19	7	4
-19	8	251
20	8	228
-20	8	219
21	8	196
-21	8	187
22	8	164
-22	8	139
23	8	116
-23	8	75
24	8	52

-24	8	11
25	9	501
-25	9	500
26	9	437
-26	9	436
27	9	373
-27	9	372
28	9	277
-28	9	276
29	9	149
-29	9	148
30	9	21
-30	9	20
31	10	917
-31	10	916
32	10	789
-32	10	788
33	10	661
-33	10	660
34	10	469
-34	10	468
35	10	214
-35	10	213
36	11	1838
-36	11	1837
37	11	1582
-37	11	1581
38	11	1326
-38	11	1325
39	11	942
-39	11	941
40	11	431
-40	11	430
41	12	3679
-41	12	3678
42	12	3167
-42	12	3166
43	12	3160
-43	12	2655
44	12	2648
-44	12	1887
45	12	1880
-45	12	851
46	12	849
-46	12	848
47	13	7346
-47	13	7345
48	13	6322
-48	13	5309
49	13	3773
-49	13	3772
50	13	3762

-50	13	1701
51	14	14695
-51	14	14694
52	14	14688
-52	14	12647
53	14	10617
-53	14	10616
54	14	10596
-54	14	7527
55	14	3401
-55	14	3400
56	15	29378
-56	15	25293
57	15	21195
-57	15	21194
58	15	15053
-58	15	15052
59	16	58759
-59	16	58758
60	16	50585
-60	16	50584
61	16	42399
-61	16	42398
62	16	42397
-62	16	42396
63	16	42395
-63	16	42394
64	16	42393
-64	16	42392

Table 107 Audio Inverse Quantizer - E129 Characteristic

level	code length	code
0	5	12
1	5	11
-1	5	10
2	5	9
-2	5	8
3	5	7
-3	5	6
4	5	4
-4	5	3
5	5	2
-5	5	1
6	5	0
-6	6	63
7	6	61
-7	6	60
8	6	59
-8	6	58
9	6	56
-9	6	55
10	6	53
-10	6	52
11	6	51
-11	6	50
12	6	47
-12	6	46
13	6	45
-13	6	44
14	6	42
-14	6	41
15	6	38
-15	6	37
16	6	36
-16	6	35
17	6	32
-17	6	31
18	6	29
-18	6	28
19	6	26
-19	6	11
20	7	125
-20	7	124
21	7	109
-21	7	108
22	7	98
-22	7	97
23	7	87
-23	7	86
24	7	79

-24	7	78
25	7	68
-25	7	67
26	7	60
-26	7	55
27	7	21
-27	7	20
28	8	230
-28	8	229
29	8	198
-29	8	193
30	8	163
-30	8	162
31	8	139
-31	8	138
32	8	123
-32	8	122
33	8	108
-33	9	463
34	9	457
-34	9	456
35	9	385
-35	9	384
36	9	321
-36	9	320
37	9	266
-37	9	265
38	9	218
-38	10	925
39	10	798
-39	10	797
40	10	648
-40	10	645
41	10	535
-41	10	534
42	10	528
-42	10	439
43	11	1848
-43	11	1599
44	11	1592
-44	11	1295
45	11	1288
-45	11	1059
46	11	877
-46	11	876
47	12	3197
-47	12	3196
48	12	2589
-48	12	2588
49	12	2117
-49	12	2116
50	13	7398

-50	13	7397
51	13	6374
-51	13	6373
52	13	5158
-52	13	5157
53	14	14799
-53	14	14798
54	14	12751
-54	14	12750
55	14	10318
-55	14	10313
56	15	29587
-56	15	29586
57	15	29584
-57	15	25491
58	15	20625
-58	15	20624
59	16	59171
-59	16	59170
60	16	50980
-60	16	41277
61	16	50981
-61	16	41278
62	16	50978
-62	16	41279
63	16	50979
-63	16	50976
64	16	50977
-64	16	41276

Table 108 Audio Inverse Quantizer - F129 Characteristic

level	code length	code
0	6	56
1	6	55
-1	6	54
2	6	52
-2	6	51
3	6	50
-3	6	49
4	6	48
-4	6	47
5	6	46
-5	6	45
6	6	44
-6	6	43
7	6	41
-7	6	40
8	6	39
-8	6	38
9	6	36
-9	6	35
10	6	34
-10	6	33
11	6	31
-11	6	30
12	6	29
-12	6	28
13	6	26
-13	6	25
14	6	23
-14	6	22
15	6	21
-15	6	20
16	6	18
-16	6	17
17	6	15
-17	6	14
18	6	12
-18	6	11
19	6	9
-19	6	8
20	6	7
-20	6	6
21	6	3
-21	6	2
22	6	1
-22	6	0
23	7	125
-23	7	124
24	7	123

-24	7	122
25	7	120
-25	7	119
26	7	116
-26	7	115
27	7	114
-27	7	107
28	7	84
-28	7	75
29	7	65
-29	7	64
30	7	54
-30	7	49
31	7	39
-31	7	38
32	7	27
-32	7	26
33	7	20
-33	7	11
34	7	10
-34	7	9
35	8	254
-35	8	253
36	8	243
-36	8	242
37	8	235
-37	8	234
38	8	213
-38	8	212
39	8	149
-39	8	148
40	8	110
-40	8	97
41	8	66
-41	8	65
42	8	43
-42	8	42
43	8	16
-43	9	511
44	9	505
-44	9	504
45	9	474
-45	9	473
46	9	343
-46	9	342
47	9	340
-47	9	223
48	9	192
-48	9	135
49	9	129
-49	9	128
50	9	34

-50	10	1021
51	10	951
-51	10	950
52	10	944
-52	10	683
53	10	445
-53	10	444
54	10	269
-54	10	268
55	10	71
-55	10	70
56	11	2040
-56	11	1891
57	11	1364
-57	11	775
58	11	774
-58	11	773
59	12	4083
-59	12	4082
60	12	3780
-60	12	2731
61	12	1545
-61	12	1544
62	13	7562
-62	13	5461
63	13	5460
-63	14	15127
64	15	30253
-64	15	30252

Table 108 Audio Inverse Quantizer - G129 Characteristic

level	code length	code
0	4	0
1	5	29
-1	5	28
2	5	25
-2	5	24
3	5	21
-3	5	20
4	5	17
-4	5	16
5	5	13
-5	5	12
6	5	9
-6	5	8
7	5	5
-7	5	4
8	6	63
-8	6	62
9	6	55
-9	6	54
10	6	47
-10	6	46
11	6	39
-11	6	38
12	6	31
-12	6	30
13	6	23
-13	6	22
14	6	15
-14	6	14
15	6	7
-15	6	6
16	7	123
-16	7	122
17	7	107
-17	7	106
18	7	91
-18	7	90
19	7	75
-19	7	74
20	7	59
-20	7	58
21	7	43
-21	7	42
22	7	27
-22	7	26
23	7	11
-23	7	10
24	7	8

-24	8	243
25	8	240
-25	8	211
26	8	208
-26	8	179
27	8	176
-27	8	147
28	8	144
-28	8	115
29	8	112
-29	8	83
30	8	80
-30	8	51
31	8	48
-31	8	19
32	9	484
-32	9	483
33	9	421
-33	9	420
34	9	357
-34	9	356
35	9	293
-35	9	292
36	9	229
-36	9	228
37	9	226
-37	9	165
38	9	162
-38	9	101
39	9	98
-39	9	37
40	10	970
-40	10	965
41	10	839
-41	10	838
42	10	711
-42	10	710
43	10	708
-43	10	583
44	10	580
-44	10	455
45	10	329
-45	10	328
46	10	201
-46	10	200
47	10	198
-47	10	73
48	11	1942
-48	11	1929
49	11	1675
-49	11	1674
50	11	1672

-50	11	1419
51	11	1165
-51	11	1164
52	11	1162
-52	11	909
53	11	655
-53	11	654
54	11	652
-54	11	399
55	11	145
-55	11	144
56	12	3886
-56	12	3857
57	12	3347
-57	12	3346
58	12	2837
-58	12	2836
59	12	2327
-59	12	2326
60	12	1817
-60	12	1816
61	12	1307
-61	12	1306
62	12	797
-62	12	796
63	13	7775
-63	13	7774
64	13	7713
-64	13	7712

Table 109 Audio Inverse Quantizer - Y128 Characteristic

level	code length	code
0	7	0
1	7	1
-1	7	127
2	7	2
-2	7	126
3	7	3
-3	7	125
4	7	4
-4	7	124
5	7	5
-5	7	123
6	7	6
-6	7	122
7	7	7
-7	7	121
8	7	8
-8	7	120
9	7	9
-9	7	119
10	7	10
-10	7	118
11	7	11
-11	7	117
12	7	12
-12	7	116
13	7	13
-13	7	115
14	7	14
-14	7	114
15	7	15
-15	7	113
16	7	16
-16	7	112
17	7	17
-17	7	111
18	7	18
-18	7	110
19	7	19
-19	7	109
20	7	20
-20	7	108
21	7	21
-21	7	107
22	7	22
-22	7	106
23	7	23
-23	7	105
24	7	24
-24	7	104

25	7	25
-25	7	103
26	7	26
-26	7	102
27	7	27
-27	7	101
28	7	28
-28	7	100
29	7	29
-29	7	99
30	7	30
-30	7	98
31	7	31
-31	7	97
32	7	32
-32	7	96
33	7	33
-33	7	95
34	7	34
-34	7	94
35	7	35
-35	7	93
36	7	36
-36	7	92
37	7	37
-37	7	91
38	7	38
-38	7	90
39	7	39
-39	7	89
40	7	40
-40	7	88
41	7	41
-41	7	87
42	7	42
-42	7	86
43	7	43
-43	7	85
44	7	44
-44	7	84
45	7	45
-45	7	83
46	7	46
-46	7	82
47	7	47
-47	7	81
48	7	48
-48	7	80
49	7	49
-49	7	79
50	7	50
-50	7	78

51	7	51
-51	7	77
52	7	52
-52	7	76
53	7	53
-53	7	75
54	7	54
-54	7	74
55	7	55
-55	7	73
56	7	56
-56	7	72
57	7	57
-57	7	71
58	7	58
-58	7	70
59	7	59
-59	7	69
60	7	60
-60	7	68
61	7	61
-61	7	67
62	7	62
-62	7	66
63	7	63
-63	7	65
64	7	64

Table 110 Scale Factor Inverse Quantizer - S0_129 Characteristic

level	code length	code
0	2	1
1	3	6
-1	3	5
2	3	0
-2	4	15
3	4	8
-3	4	3
4	5	28
-4	5	19
5	5	4
-5	6	59
6	6	36
-6	6	11
7	7	75
-7	7	74
8	8	233
-8	8	232
9	8	41
-9	8	40
10	9	87
-10	9	86
11	10	937
-11	10	936
12	11	1877
-12	11	1876
13	11	341
-13	11	340
14	12	686
-14	12	685
15	13	1375
-15	13	1374
16	13	1369
-16	13	1368
17	13	1359
-17	13	1358
18	13	1357
-18	13	1356
19	13	1355
-19	13	1354
20	13	1353
-20	13	1352
21	13	1351
-21	13	1350
22	13	1349
-22	13	1348
23	13	1347
-23	13	1346
24	13	1345
-24	13	1344

25	14	15103
-25	14	15102
26	14	15101
-26	14	15100
27	14	15099
-27	14	15098
28	14	15097
-28	14	15096
29	14	15095
-29	14	15094
30	14	15093
-30	14	15092
31	14	15091
-31	14	15090
32	14	15089
-32	14	15088
33	14	15087
-33	14	15086
34	14	15085
-34	14	15084
35	14	15083
-35	14	15082
36	14	15081
-36	14	15080
37	14	15079
-37	14	15078
38	14	15077
-38	14	15076
39	14	15075
-39	14	15074
40	14	15073
-40	14	15072
41	14	15071
-41	14	15070
42	14	15069
-42	14	15068
43	14	15067
-43	14	15066
44	14	15065
-44	14	15064
45	14	15063
-45	14	15062
46	14	15061
-46	14	15060
47	14	15059
-47	14	15058
48	14	15057
-48	14	15056
49	14	15055
-49	14	15054
50	14	15053
-50	14	15052

51	14	15051
-51	14	15050
52	14	15049
-52	14	15048
53	14	15047
-53	14	15046
54	14	15045
-54	14	15044
55	14	15043
-55	14	15042
56	14	15041
-56	14	15040
57	14	15039
-57	14	15038
58	14	15037
-58	14	15036
59	14	15035
-59	14	15034
60	14	15033
-60	14	15032
61	14	15031
-61	14	15030
62	14	15029
-62	14	15028
63	14	15027
-63	14	15026
64	14	15025
-64	14	15024

Table 111 Scale Factor Inverse Quantizer - S1_129 Characteristic

Table 112 Scale Factor Inverse Quantizer - S2_129 Characteristic

level	code length	code
0	3	4
1	3	1
-1	3	0
2	4	13
-2	4	12
3	4	7
-3	4	6
4	5	31
-4	5	30
5	5	23
-5	5	22
6	5	11
-6	5	10
7	6	59
-7	6	58
8	6	43
-8	6	42
9	6	19
-9	6	18
10	7	115
-10	7	114
11	7	83
-11	7	82
12	7	35
-12	7	34
13	8	227
-13	8	226
14	8	162
-14	8	161
15	8	68
-15	8	65
16	9	450
-16	9	449
17	9	321
-17	9	320
18	9	129
-18	9	128
19	10	897
-19	10	896
20	10	652
-20	10	271
21	10	268
-21	11	1807
22	11	1306
-22	11	1307
23	11	540
-23	11	539
24	12	3612
-24	12	3611

25	12	2613
-25	12	2612
26	12	1077
-26	12	1076
27	13	7226
-27	13	7221
28	13	2167
-28	13	2166
29	13	2164
-29	14	14455
30	14	14441
-30	14	14440
31	14	4331
-31	14	4330
32	15	28909
-32	15	28908
33	15	28879
-33	15	28878
34	15	28877
-34	15	28876
35	15	28875
-35	15	28874
36	15	28873
-36	15	28872
37	15	28871
-37	15	28870
38	15	28869
-38	15	28868
39	15	28867
-39	15	28866
40	15	28865
-40	15	28864
41	15	20991
-41	15	20990
42	15	20989
-42	15	20988
43	15	20987
-43	15	20986
44	15	20985
-44	15	20984
45	15	20983
-45	15	20982
46	15	20981
-46	15	20980
47	15	20979
-47	15	20978
48	15	20977
-48	15	20976
49	15	20975
-49	15	20974
50	15	20973
-50	15	20972

51	15	20971
-51	15	20970
52	15	20969
-52	15	20968
53	15	20967
-53	15	20966
54	15	20965
-54	15	20964
55	15	20963
-55	15	20962
56	15	20961
-56	15	20960
57	15	20959
-57	15	20958
58	15	20957
-58	15	20956
59	15	20955
-59	15	20954
60	15	20953
60	15	20952
61	15	20951
-61	15	20950
62	15	20949
-62	15	20948
63	15	20947
-63	15	20946
64	15	20945
-64	15	20944

Table 113 Scale Factor Inverse Quantizer - S3_129 Characteristic

level	code length	code
0	2	0
1	3	5
-1	3	4
2	4	15
-2	4	14
3	4	7
-3	4	6
4	5	26
-4	5	25
5	5	10
-5	5	9
6	6	54
-6	6	49
7	6	22
-7	6	17
8	7	110
-8	7	97
9	7	46
-9	7	33
10	8	193
-10	8	192
11	8	65
-11	8	64
12	9	444
-12	9	191
13	9	188
-13	10	895
14	10	890
-14	10	381
15	10	378
-15	11	1789
16	11	761
-16	11	760
17	12	3577
-17	12	3576
18	12	1519
-18	12	1518
19	12	1516
-19	13	7151
20	13	7128
-20	13	3035
21	14	14301
-21	14	14300
22	14	6069
-22	14	6068
23	15	28599
-23	15	28598
24	15	28597
-24	15	28596

25	15	28595
-25	15	28594
26	15	28593
-26	15	28592
27	15	28591
-27	15	28590
28	15	28589
-28	15	28588
29	15	28587
-29	15	28586
30	15	28585
-30	15	28584
31	15	28583
-31	15	28582
32	15	28581
-32	15	28580
33	15	28579
-33	15	28578
34	15	28577
-34	15	28576
35	15	28575
-35	15	28574
36	15	28573
-36	15	28572
37	15	28571
-37	15	28570
38	15	28569
-38	15	28568
39	15	28567
-39	15	28566
40	15	28565
-40	15	28564
41	15	28563
-41	15	28562
42	15	28561
-42	15	28560
43	15	28559
-43	15	28558
44	15	28557
-44	15	28556
45	15	28555
-45	15	28554
46	15	28553
-46	15	28552
47	15	28551
-47	15	28550
48	15	28549
-48	15	28548
49	15	28547
-49	15	28546
50	15	28545
-50	15	28544

51	15	28543
-51	15	28542
52	15	28541
-52	15	28540
53	15	28539
-53	15	28538
54	15	28537
-54	15	28536
55	15	28535
-55	15	28534
56	15	28533
-56	15	28532
57	15	28531
-57	15	28530
58	15	28529
-58	15	28528
59	15	28527
-59	15	28526
60	15	28525
-60	15	28524
61	15	28523
-61	15	28522
62	15	28521
-62	15	28520
63	15	28519
-63	15	28518
64	15	28517
-64	15	28516

Table 114 Scale Factor Inverse Quantizer - S4_129 Characteristic

level	code length	code
0	4	14
1	4	11
-1	4	10
2	4	7
-2	4	6
3	4	3
-3	4	2
4	5	31
-4	5	30
5	5	25
-5	5	24
6	5	17
-6	5	16
7	5	9
-7	5	8
8	5	1
-8	5	0
9	6	53
-9	6	52
10	6	37
-10	6	36
11	6	21
-11	6	20
12	6	5
-12	6	4
13	7	109
-13	7	108
14	7	77
-14	7	76
15	7	45
-15	7	44
16	7	13
-16	7	12
17	8	221
-17	8	220
18	8	157
-18	8	156
19	8	93
-19	8	92
20	8	29
-20	8	28
21	9	445
-21	9	444
22	9	317
-22	9	316
23	9	189
-23	9	188
24	9	61
-24	9	60

25	10	892
-25	10	639
26	10	637
-26	10	636
27	10	381
-27	10	380
28	10	125
-28	10	124
29	11	1788
-29	11	1787
30	11	1276
-30	11	767
31	11	764
-31	11	255
32	11	252
-32	12	3583
33	12	3579
-33	12	3578
34	12	2555
-34	12	2554
35	12	1531
-35	12	1530
36	12	507
-36	12	506
37	13	7160
-37	13	7147
38	13	7144
-38	13	3067
39	13	3065
-39	13	3064
40	13	1017
-40	13	1016
41	14	14330
-41	14	14329
42	14	14291
-42	14	14290
43	14	6132
-43	14	2039
44	14	2038
-44	14	2037
45	15	28663
-45	15	28662
46	15	28585
-46	15	28584
47	15	12267
-47	15	12266
48	15	4073
-48	15	4072
49	16	57315
-49	16	57314
50	16	57313
-50	16	57312

51	16	57311
-51	16	57310
52	16	57309
-52	16	57308
53	16	57307
-53	16	57306
54	16	57305
-54	16	57304
55	16	57303
-55	16	57302
56	16	57301
-56	16	57300
57	16	57299
-57	16	57298
58	16	57297
-58	16	57296
59	16	57295
-59	16	57294
60	16	57293
-60	16	57292
61	16	57291
-61	16	57290
62	16	57289
-62	16	57288
63	16	57175
-63	16	57174
64	16	57173
-64	16	57172

Table 115 Scale Factor Inverse Quantizer - S5_64 Characteristic

level	code length	code
0	6	0
1	6	1
2	6	2
3	6	3
.	.	.
.	.	.
.	.	.
62	6	62
63	6	63

Table 116 Scale Factor Inverse Quantizer - S6_128 Characteristic

level	code length	code
0	7	0
1	7	1
2	7	2
3	7	3
.	.	.
.	.	.
.	.	.
126	7	126
127	7	127

Table 117 TMODE Inverse Quantizer - A4 Characteristic

level	code length	code
0	1	0
1	2	2
2	3	6
3	3	7

Table 118 TMODE Inverse Quantizer - B4 Characteristic

level	code length	code
3	1	0
0	2	2
1	3	6
2	3	7

Table 119 TMODE Inverse Quantizer - C4 Characteristic

level	code length	code
2	1	0
3	2	2
0	3	6
1	3	7

Table 120 TMODE Inverse Quantizer - Y4 Characteristic

level	code length	code
0	2	0
1	2	1
2	2	2
3	2	3

Table 121 Bit Allocation Index Inverse Quantizer - B0_12 Characteristic

ABITS	code length	code
1	1	1
2	2	0
3	3	2
4	5	15
5	5	12
6	6	29
7	7	57
8	7	56
9	7	55
10	7	54
11	7	53
12	7	52

Table 122 Bit Allocation Index Inverse Quantizer - B1_12 Characteristic

ABITS	code length	code
1	1	0
2	2	2
3	3	6
4	4	14
5	5	30
6	6	62
7	8	255
8	8	254
9	9	507
10	9	506
11	9	505
12	9	504

Table 123 Bit Allocation Index Inverse Quantizer - B2_12 Characteristic

ABITS	code length	code
1	2	0
2	3	7
3	3	5
4	3	4
5	3	2
6	4	13
7	4	12
8	4	6
9	5	15
10	6	29
11	7	57
12	7	56

Table 124 Bit Allocation Index Inverse Quantizer - B3_12 Characteristic

ABITS	code length	code
1	2	3
2	2	2
3	2	0
4	3	2
5	4	6
6	5	14
7	6	30
8	7	62
9	8	126
10	9	254
11	10	511
12	10	510

Table 125 Bit Allocation Index Inverse Quantizer - B4_12 Characteristic

ABITS	code length	code
1	1	1
2	2	0
3	3	2
4	4	6
5	5	14
6	7	63
7	7	61
8	8	124
9	8	121
10	8	120
11	9	251
12	9	250

Table 126 Bit Allocation Index Inverse Quantizer - B6_12 Characteristic

ABITS	code length	code
0	2	3
1	2	2
2	2	0
3	3	2
4	4	6
5	5	14
6	6	30
7	7	62
8	8	126
9	9	254
10	10	511
11	10	510

Table 127 Bit Allocation Index Inverse Quantizer - B6_16 Characteristic

ABITS	code length	code
0	4	0
1	4	1
2	4	2
3	4	3
4	4	4
5	4	5
6	4	6
7	4	7
8	4	8
9	4	9
10	4	10
11	4	11
12	4	12
13	4	13
14	4	14
15	4	15

Table 128 Bit Allocation Index Inverse Quantizer - B7_32 Characteristic

ABITS	code length	code
0	5	0
1	5	1
2	5	2
3	5	3
4	5	4
5	5	5
6	5	6
7	5	7
8	5	8
9	5	9
10	5	10
11	5	11
12	5	12
13	5	13
14	5	14
15	5	15
16	5	16
17	5	17
18	5	18
19	5	19
20	5	20
21	5	21
22	5	22
23	5	23
24	5	24
25	5	25
26	5	26
27	5	27
28-31	invalid	invalid

Table 29 High Frequency 32-vector Look-up Table (Q4 fractional binary)

Vector 0

0	0	0	0	0	0	0	0
0	0	0	0	0	0	0	0
0	0	0	0	0	0	0	0
0	0	0	0	0	0	0	0

Vector 1

-2	-4	1	2	-10	-16	3	1
0	1	1	6	7	-3	-22	1
-4	2	11	-3	6	14	1	-1
29	-13	10	-28	-8	10	-9	0

Vector 2

8	-8	10	-7	-12	-3	-8	-5
2	1	-2	9	-18	-5	9	1
-8	-8	41	3	-9	7	22	-9
-29	-42	-18	14	-32	-14	-15	1

etc

8	-16	16	15	5	-16	7	2
-16	-6	1	-7	-3	1	0	-2
20	8	-11	25	-17	2	-3	0
-37	-34	44	-0	22	-2	-4	2
14	7	6	5	-1	15	-3	3
-23	-9	-14	-5	-1	8	-6	-14
-8	-5	31	54	18	-6	-19	2
11	-2	6	-30	2	-19	-14	-2
2	1	-1	-2	-3	-3	-5	1
-3	1	-8	-4	-4	5	1	0
7	3	-4	-5	-12	-3	-2	3
12	-3	-51	-53	-1	6	8	6
-1	0	1	5	-8	-6	5	7
-4	-18	1	-1	-3	0	-14	-3
-6	-1	-14	0	-1	-1	-3	5
1	-11	10	-20	19	2	-2	-2
4	2	0	3	0	5	1	3
0	-2	-3	-6	-5	-4	-3	-3
0	7	4	-34	17	-43	-53	0
-7	-13	14	24	-18	5	-20	9
0	1	2	-3	-5	3	7	-2
5	-21	23	-25	-28	11	1	2
9	-11	-6	13	5	-12	2	7
11	4	-1	-6	0	8	-2	1
-4	2	-4	-6	-5	0	13	-29
-22	-6	-43	-3	-41	12	24	5
-9	18	-6	-36	-7	4	13	-4
-15	4	-5	-1	2	1	4	-5
-1	0	-6	13	1	-5	-3	0
-5	1	-22	19	-27	31	-15	4
15	-6	-13	9	-9	1	-17	10
-1	4	4	-1	0	2	-5	-3
3	-7	13	-8	-12	19	-19	8
-2	-3	31	-24	0	14	-13	7
0	-18	6	3	-2	13	-12	1
9	-21	30	-2	-14	21	-14	2
-7	-3	-1	8	-9	-2	1	6
7	-7	3	13	-10	-1	4	30
12	-10	6	5	-7	-13	-2	-4
7	-2	-6	-3	4	3	2	1
9	-8	-3	2	2	-5	9	0
7	3	-16	-4	3	-13	-27	23
46	18	6	-38	43	4	0	-1
-7	8	-1	-4	-7	11	-3	6
1	1	-8	18	0	-6	4	3
-3	22	-2	-4	-11	-4	-7	40
-13	-3	-7	-14	14	-10	5	7
11	-14	7	-5	-2	21	-3	9
0	0	4	-2	0	-2	0	2
2	-1	0	-1	2	0	2	2
1	-1	-1	-3	2	-15	27	-63
-47	-21	1	-14	10	-14	2	0
0	1	0	-4	9	-3	2	4
-6	6	-5	0	-7	11	6	15
6	-7	7	3	-5	15	13	23
12	-6	9	-8	-3	2	4	3
0	6	0	3	-4	-2	1	2
-1	1	-2	1	-4	-1	15	-22
-66	-46	20	10	-17	2	-6	12
-2	1	0	-2	5	1	2	1
0	-1	1	0	-4	0	1	0
-3	-10	5	-8	-11	7	-11	2
-25	29	10	11	-1	0	7	5
-5	-2	4	-2	-3	4	-2	5
-1	1	-3	-1	1	-2	3	-8
-2	2	-5	4	-7	-1	1	2
-7	-14	-30	3	-14	15	-4	3
3	-1	-1	-13	1	-3	3	2
-2	-1	2	-3	-3	2	1	3
2	-3	-4	0	5	6	10	-5
3	-57	-50	22	-2	1	-6	-5
5	-1	2	1	1	2	2	-2
0	2	-7	-1	1	2	2	3
4	0	-2	3	-3	3	-4	4
-35	24	38	-3	5	6	20	15
16	3	-5	-7	-4	0	0	-5
1	0	0	0	-1	0	1	-1
-1	1	-2	1	0	0	0	0
-1	0	-1	-2	-2	-5	-3	-43
-52	46	7	-10	11	-8	-1	-2
0	0	0	-1	2	-1	33	-41
-48	-44	-26	-15	6	-9	3	3
2	-3	2	2	-1	2	-2	-1
3	1	0	0	2	5	1	3
1	-4	1	6	-1	-6	1	-2
-4	-14	-5	0	2	-2	0	-2
1	-6	8	0	32	-21	-36	3
-2	-6	-7	-1	0	3	-6	1
-2	-3	0	3	2	2	-4	8
6	-4	1	2	-6	3	3	4
0	13	-1	-12	-20	25	-23	-2
7	-15	-11	-3	6	-3	0	-1
0	0	-1	-3	0	0	-1	-2
-2	-2	-1	1	0	0	3	10
3	-2	-7	3	-5	-6	-4	0
-16	-60	38	-6	6	5	0	-5
1	0	0	0	0	0	0	0
-1	1	0	-1	0	1	1	0
0	0	0	-1	2	-8	10	-9
31	40	-21	-56	20	4	7	-4
-2	-2	4	0	-1	-3	3	7
3	1	0	-8	1	3	5	2
-2	1	5	14	5	4	5	5
9	-5	0	-46	-2	-20	4	-8
-1	-2	-1	4	-2	-6	-1	-4
-3	-3	-7	2	5	-3	-2	7
31	45	-16	-17	-2	-2	-22	-1
-1	1	3	-3	-3	5	-1	5
0	-4	5	7	7	8	9	2
-9	-9	-11	-7	-8	-3	-4	17
32	34	22	18	2	1	-7	1

6	-5	6	-1	10	4	-7	-2
0	6	9	14	-1	6	-3	-2
-6	4	4	-8	-1	7	38	28
-1	15	-11	16	8	5	-10	4
-10	3	5	-17	3	3	1	3
1	1	-1	2	1	2	0	0
0	-1	-2	0	-3	1	1	0
-2	2	-2	-4	-1	0	-3	1
1	1	-1	1	8	8	33	66
2	5	7	3	8	2	10	-4
18	17	4	7	7	4	6	6
5	-5	2	12	6	0	2	8
4	1	2	11	8	1	19	31
9	6	-6	16	-1	-6	-3	-2
-2	-11	7	7	3	17	10	4
5	2	8	-13	1	7	5	4
6	7	8	7	-8	9	6	33
1	3	0	1	-5	-7	14	0
1	7	1	7	-4	2	10	7
12	-16	-6	1	8	3	10	-1
-6	-13	-23	-12	-3	12	14	30
-15	-2	8	0	-19	3	-3	5
3	2	7	13	-3	14	0	-10
5	8	-16	-6	-8	-8	2	14
1	-1	-11	-9	-5	11	9	27
6	-8	4	-4	-1	-4	4	5
-7	1	-4	-5	1	-15	0	9
4	8	-17	1	-2	11	-1	-19
-8	-6	-12	3	-17	3	-10	33
-1	3	7	2	-2	7	8	9
-1	-18	-10	-13	-3	-3	8	11
12	-2	1	-8	9	4	10	14
0	3	1	2	3	-2	10	31
-10	-3	-1	8	-11	-5	-5	7
6	3	4	1	10	-16	-4	5
-10	-2	13	-1	-5	6	12	-7
-3	7	1	-17	-4	12	8	29
2	1	2	5	-7	-6	-1	0
1	6	6	10	5	-4	2	2
-8	-2	-11	-6	-13	14	3	27
-12	-2	-16	5	-26	2	15	20
-3	-1	-3	-5	6	-3	3	-1
1	-5	2	-7	0	1	-1	-1
-1	0	7	9	-3	-6	-5	4
8	-4	-25	-8	-4	-8	23	34
2	-1	1	1	-2	-1	1	-1
0	-1	0	0	-2	0	1	-1
2	0	1	1	0	4	1	0
0	-1	3	5	-9	12	-16	68
0	10	14	-8	1	-6	0	-12
-3	0	-11	-5	12	-6	-10	9
5	-3	7	0	2	11	-3	4
-3	-8	4	7	-3	3	4	34
13	-12	7	-5	-2	-11	1	-1
-14	-4	3	-21	-3	-3	-7	-4
-4	-9	-17	3	-13	-2	-2	10
-4	12	-9	0	-5	1	10	31
6	-10	6	5	-7	4	0	10
-3	-28	-11	0	-5	-1	-10	16
7	-16	2	20	2	-4	0	-5
6	15	-10	5	-9	7	4	20
-7	1	-7	-2	-3	4	-7	-2
-14	-1	-16	6	-5	4	-6	-4
0	-5	2	-2	9	-6	4	-5
8	-18	8	-10	0	15	1	32
7	-5	7	-3	-4	15	-16	0
5	9	5	-5	-3	4	-9	-12

10	-18	2	2	7	-3	-1	3
-9	6	3	-10	-4	15	-7	35
-10	-1	2	2	-2	-4	2	10
2	-1	1	-2	-14	-1	3	-11
5	-8	-2	-8	-1	6	1	-7
5	7	8	7	-4	30	14	30
-2	2	2	1	8	3	0	3
0	-2	2	-9	4	1	1	6
5	-2	1	0	12	-2	-3	6
3	9	-12	4	-39	21	2	24
5	3	2	1	2	2	6	3
2	8	8	11	4	1	2	2
10	-4	-5	12	1	11	-34	-15
-7	-11	-1	11	14	7	-1	38
6	-4	9	8	1	8	9	5
-2	4	-4	15	-15	11	-1	20
-3	-1	-9	4	2	2	8	2
12	6	0	5	12	11	-4	27
8	0	3	-4	6	11	2	11
0	3	-8	5	6	7	21	9
-11	4	-16	1	16	-7	7	3
4	-7	0	-5	-7	11	3	31
3	1	11	4	2	-11	-6	3
5	6	3	0	6	-9	-4	4
4	0	13	8	13	-6	5	1
4	-1	0	0	-22	9	18	24
3	-7	-13	10	6	-6	6	-6
1	22	-14	0	3	2	-1	7
20	8	5	-1	13	-4	-9	9
6	-9	-4	0	8	0	-4	31
4	-3	1	0	3	7	0	7
-2	5	3	1	1	3	2	5
2	5	4	-11	-1	0	0	12
-13	-3	8	15	-27	-6	0	34
-3	-3	-4	10	-1	2	0	-3
-1	-1	2	-4	-2	6	1	12
-6	3	-6	-7	4	-5	-6	-19
-34	-8	-8	-4	-7	10	10	23
0	-7	-6	-1	4	8	2	-4
-8	-5	-9	-7	5	-8	7	9
1	-6	-12	-12	-16	-1	0	5
3	16	-8	-7	-4	27	15	23
4	-8	5	8	11	6	5	-3
-1	3	6	11	0	-5	-6	2
-6	-3	-1	4	-5	5	-6	-12
-5	7	3	9	-7	6	1	29
3	1	-2	-2	-2	-6	6	1
3	-6	2	1	4	3	5	1
0	-1	2	4	6	11	-3	2
-9	13	18	-19	-10	-15	21	36
-3	-3	-1	2	6	-7	1	-4
-1	-3	2	-2	-7	3	0	-3
0	-2	6	-2	3	-19	2	-8
7	-6	0	-1	-6	29	-10	28
1	-5	-7	-3	-4	-12	1	1
13	-1	-1	-10	-5	-9	6	-13
3	13	2	-4	11	3	6	2
-16	-25	0	-6	-1	14	16	27
-1	-6	-5	-7	-5	-2	-1	-5
1	9	3	0	-12	-8	5	-6
5	-6	-9	3	4	1	-10	-7
-7	-9	-5	-17	-23	-15	3	25
-2	-8	-3	9	3	-4	8	-1
-7	-7	-4	-5	9	-2	-1	4
-4	-7	-16	-5	-6	3	-13	18
16	-9	8	-15	-10	15	5	24
-38	1	34	2	10	9	2	11

-6	2	2	3	5	-2	-7	4
1	-1	0	4	1	3	-1	-8
5	-6	2	4	5	-4	-1	2

-22	1	18	15	10	-2	-9	-16
-11	-8	4	8	7	0	-5	-14
-7	-1	17	12	5	9	-4	-7
-6	-12	0	7	2	7	1	-2

-29	-11	10	7	-1	19	-9	-8
1	7	6	9	-7	8	8	-14
11	-3	0	-13	-23	-7	-8	-2
9	12	14	2	1	19	5	-1

-27	-24	36	-11	6	2	4	-3
8	-6	12	0	-4	-1	3	-6
1	4	-3	2	3	-2	-1	2
-4	-2	-1	0	7	-2	3	2

24	-9	13	11	-12	-10	-2	12
4	7	13	8	-3	-3	9	2
-4	-3	13	4	13	5	-3	-6
15	1	-3	7	19	0	-9	-2

-15	-8	14	7	-5	-4	-18	2
-2	-19	17	2	6	16	10	-10
14	-9	-5	-1	-6	-1	2	-7
11	9	6	13	-12	-5	2	3

-37	-10	1	13	-14	3	-20	0
3	4	2	8	-3	-2	-5	-9
-17	-3	13	-1	2	-11	4	-6
0	4	1	3	-4	-9	-4	-5

22	-2	46	-5	5	-8	-11	9
7	8	-1	7	-2	-1	2	-7
3	-3	-2	-1	0	7	-1	2
2	1	-3	-2	0	6	-6	-4

-27	-16	16	15	14	-4	-26	-7
-2	2	5	6	11	-3	2	0
9	3	-1	-7	-4	2	-1	-4
10	6	1	1	-2	-3	0	3

-22	-3	26	10	2	1	3	-3
-3	17	9	-7	-21	1	5	-4
0	3	-6	-7	3	3	-7	-8
3	-9	1	7	12	-8	-7	6

-25	-9	18	3	-6	9	0	-11
-12	-5	-8	9	-6	-7	22	-6
-6	2	15	-3	2	3	9	-2
-10	14	-3	-7	6	13	11	-2

-20	5	-8	-5	10	11	-4	-4
-7	0	5	3	-5	2	2	-8
10	6	-9	9	3	-18	1	14
-3	3	-6	-1	7	7	-1	2

-30	-8	12	7	8	10	-13	7
0	-16	-1	1	-11	-6	4	-15
-2	1	-15	10	11	1	8	-2
-7	9	9	-7	2	-5	-18	7

-32	-10	11	10	-1	3	-5	3
2	5	-6	14	1	3	-15	5
6	-11	4	20	-12	0	3	-7
-1	1	6	10	-9	-1	-1	-4

-25	1	12	-14	9	-11	-16	9
-17	-24	-9	22	-30	11	-4	-3
-7	6	2	9	-5	-1	2	-6
-1	-1	1	10	3	-3	8	4

-26	-14	9	-6	17	8	-24	-11
-4	-7	-2	-8	2	10	-1	2
13	2	-7	12	-6	4	6	-10
-13	6	-7	-11	0	-16	5	-2

-30	-4	12	-13	-6	16	-16	12
5	-13	-2	15	-10	-2	7	-7
-1	11	-2	-4	7	-4	-8	6
3	1	11	0	-2	3	4	-5

-21	-4	22	20	20	2	1	-8
-5	-12	4	-9	-17	-10	-8	3
3	-3	1	-12	0	-3	6	7
7	7	7	-3	3	5	-5	1

20	-12	29	2	-6	11	-7	9
-4	-6	6	0	-13	17	-10	2
-1	-17	2	18	14	0	1	6
3	0	-10	2	-5	1	5	2

-37	16	26	-1	14	2	5	1
2	-14	3	2	1	6	4	1
-1	0	-2	0	4	2	6	9
2	0	-7	10	4	2	0	1

-24	-9	5	-12	3	5	14	17
3	4	-4	2	22	10	3	8
1	6	-8	12	1	4	-1	9
-3	18	5	6	-5	3	5	9

-33	-14	20	-2	10	-13	7	2
11	-1	-8	-9	3	18	8	1
-2	0	7	10	13	2	-3	9
5	-4	-2	-2	-5	-1	-7	1

-23	-10	14	8	7	1	-3	1
4	-7	1	1	7	8	-14	15
14	13	5	2	-5	13	1	8
3	6	9	6	15	6	5	14

-25	-13	13	-10	-24	-17	-13	-7
-10	-6	2	-8	-13	0	-4	10
4	-8	9	-9	4	-4	-3	-3
3	3	-9	-5	-2	1	2	11

-23	-12	18	1	-2	11	9	5
5	-5	-9	14	2	-3	2	6
11	-2	1	-13	11	-3	-4	9
-6	-2	10	8	4	1	1	2

-18	-5	22	16	0	2	-6	8
-7	-9	-16	10	10	23	-1	-11
2	7	2	7	-5	1	1	6
-4	0	2	9	1	-3	-4	0

-26	-3	11	14	-9	2	-2	17
-5	-1	-9	-16	10	-5	1	-13
12	6	11	10	0	0	-14	-3
-2	6	4	0	-1	-5	-1	-7

-33	-10	8	1	-5	11	-6	1
4	7	6	5	-2	1	-5	-10
12	-6	5	-11	4	-10	-1	12
-3	-1	-1	4	0	9	-17	14

-37	-14	7	7	5	-2	-11	-8
-13	2	-19	4	8	1	4	8
2	-9	3	-4	2	12	-4	4
8	-8	4	1	-1	8	-2	6

-30	-6	17	18	-22	1	4	3
-10	-7	0	7	8	-8	4	-1
8	2	-2	6	7	2	4	4
-6	3	1	2	1	-3	-5	-1

-18	-17	22	-3	1	-8	-2	9
20	-17	-5	-5	-5	-12	-5	4
8	-9	16	-2	0	-3	-8	19
1	8	-4	2	11	0	-3	0

-23	-9	10	3	4	4	-2	-3
-2	-2	-22	1	0	11	5	-2
14	-2	-11	-9	7	-4	22	5
-3	1	0	-7	-9	21	-6	7

0	0	2	0	1	-1	1	0
0	3	1	0	1	0	1	0
0	-3	-2	-1	-1	0	-3	-1
1	-1	1	-4	-5	-1	-19	-49

-5	-3	-12	-8	-3	4	-11	-19
0	-5	7	-14	-6	18	22	7
14	8	10	15	-1	3	5	-3
7	-1	1	-7	3	-6	-11	-26

-6	-1	-4	4	-16	-5	-6	0
11	3	0	1	5	9	3	16
-33	-4	4	-4	0	-7	6	1
-2	-11	-2	-13	20	-18	-16	-25
0	4	0	-1	1	-5	2	0
11	0	4	-10	7	-10	2	16
15	16	-1	2	9	2	8	2
-5	3	0	-2	0	-3	-2	33
15	-3	10	10	-1	9	3	7
5	5	8	-8	15	-3	4	9
13	12	-14	-13	6	10	22	9
23	-27	5	-1	2	-24	5	30
2	0	5	7	3	-5	3	5
5	3	1	2	3	-4	-1	-3
2	1	22	10	-4	-3	-2	2
3	-7	1	8	4	14	9	-37
-4	3	1	-1	0	-4	2	6
7	6	10	10	-4	1	-3	11
6	7	-12	4	5	1	7	1
-6	10	-4	17	3	8	13	-40
12	2	-7	4	-3	14	-2	16
2	18	5	13	1	5	-1	11
9	0	-6	2	2	-1	2	-6
3	-5	1	5	1	-1	-7	-32
11	-16	-4	7	-5	2	9	-9
11	11	-13	15	11	-11	4	9
-8	3	12	-10	0	12	-16	0
13	-9	9	2	-13	4	3	-33
4	6	4	5	-1	3	6	5
2	4	-1	-11	-11	-15	1	-1
-3	11	24	-2	-6	-4	-10	-25
-8	-15	0	0	4	-5	2	-30
-3	10	1	-6	-5	-9	9	6
-3	-10	1	8	-1	4	-11	11
9	3	-3	11	-17	6	-8	5
9	-33	19	-13	9	-2	2	-25
0	0	-3	-1	-2	0	0	1
2	0	0	1	0	-2	2	-1
-1	0	-1	4	-3	2	-2	4
3	3	0	1	12	-15	27	-63
14	2	-1	9	0	3	1	1
15	-19	4	3	-10	0	-5	1
0	3	-10	-5	-16	2	8	-4
-6	-12	-5	7	-1	-10	-4	-33
3	0	3	1	2	1	4	4
-6	9	-5	-8	-12	1	8	3
6	10	1	-1	-5	13	2	-5
13	-4	10	-18	-9	-7	10	33
-3	-6	5	-12	11	-1	0	-6
1	-2	-7	2	1	3	-2	3
8	1	7	-10	-3	-1	0	3
1	13	7	6	-7	-16	8	-39
-1	-6	6	11	8	-3	-5	3
0	3	-2	-5	-3	-6	2	-4
13	-3	1	-11	5	7	-5	19
-15	-3	7	-1	6	-1	8	-33
3	-7	-3	-4	1	-4	-5	6
6	-5	-1	-8	4	-7	-6	-1
1	-2	0	7	1	1	2	-5
0	-2	-2	-13	-14	-31	-12	-39
9	-10	-3	0	-1	1	0	-1
-5	1	-4	-1	5	-2	-7	2
-8	18	-19	-2	-7	-7	-14	-12
-1	-11	-13	-9	-12	-7	-9	-31
-16	-3	9	10	-10	1	2	-12
2	-2	-3	7	1	-3	-5	-4
5	-9	3	7	4	-1	-8	-11

13	4	13	-10	-4	10	1	-36
-12	-7	-20	4	-7	-7	11	2
-2	-1	-12	9	0	1	-7	-6
4	6	3	13	4	-3	-6	3
5	-12	-22	-5	-8	-13	6	-37
5	-7	5	3	9	7	3	14
17	10	1	1	5	12	0	-6
-9	-4	-11	0	3	14	6	13
-8	-25	4	12	18	10	1	30
6	-10	6	10	1	6	0	10
5	7	17	2	4	18	3	0
6	-16	8	3	1	5	6	4
16	7	10	6	0	1	11	32
9	-1	5	9	9	4	9	6
-2	-4	11	7	2	4	4	5
0	-6	-3	2	5	-1	0	10
-10	12	-3	18	14	-1	2	-33
-8	4	-4	18	11	5	10	4
9	-4	-12	13	6	1	2	1
-9	4	3	8	21	-6	1	13
1	-2	6	-2	0	-7	1	30
-1	6	-3	2	-4	-1	-4	6
4	0	2	2	2	-9	3	6
4	-2	9	-1	0	-6	-8	7
19	5	9	-2	2	-5	8	33
1	2	-5	12	8	8	2	3
1	-4	5	-2	-9	-4	-8	-8
-11	7	6	-4	7	-10	-1	-1
-1	-2	32	16	20	-7	-6	-33
2	-18	13	6	9	9	3	1
24	-17	-6	-2	8	28	6	2
-10	3	16	-34	-4	-13	-11	15
-3	-12	4	-10	4	-8	-4	-31
0	-11	2	18	9	-16	-2	-13
-12	-2	-22	-3	0	30	3	8
-4	9	1	-16	-11	0	-2	15
6	-4	6	-5	2	1	-12	-25
-1	14	7	5	-15	3	1	-8
-2	5	13	12	25	11	1	3
-2	0	-16	-4	0	-23	-17	5
5	7	6	-9	2	-5	-7	-32
-1	3	14	6	-12	2	9	-9
7	4	6	4	-8	5	2	4
5	4	8	-2	-6	8	10	0
-1	-20	-1	3	23	8	5	-33
11	-3	3	-6	5	-4	3	7
5	4	3	-2	30	-1	1	6
6	8	0	0	6	9	4	9
9	2	1	-6	0	-12	18	34
13	-17	1	0	-4	9	0	-11
0	7	-4	-10	6	-1	4	-6
6	1	3	-9	-6	-5	2	-11
14	-4	-3	23	5	2	12	-30
5	-14	2	-27	7	0	4	1
8	30	5	7	-1	1	5	0
-10	8	-11	48	33	12	8	6
20	-15	-5	-2	5	32	10	-19
-4	-16	-7	-12	0	-2	-6	8
-18	-20	-3	16	31	0	11	-2
-9	2	-19	49	-23	-12	26	10
-2	16	-21	4	13	-14	-9	-11
-9	-5	3	-1	-21	-5	10	2
0	0	-21	10	7	-7	-9	-26
32	22	11	58	11	-3	-8	-5
6	-13	-9	-5	10	1	-8	14
7	7	3	10	-1	-2	-11	-11
-43	-6	14	-3	-18	-19	18	19

```
 10   32   -6   45   21    6  -12  -20
  4    2    6    6    3   -4    1    3

 22   21   -2   -3   -6  -11   -2   -1
  8    8  -21   12   28    7   -6   -4
 -2   -3    2   50   27    2   -8   -5
  7   12   -1   -5  -17   -4    6   27

  7   13   -6    2    2  -14   -5  -10
 11  -17   17    4   -2  -12  -17    5
-16   37   14   48   29  -18   24    8
 -5   11   11    9    1    1   -3  -13

  1    1    2    1    0    0    1    0
  1    1    2    7    3    3    6    0
 10    2   25   54   54    7   -6   -5
-15   -1   13    9   15  -24    3  -12

  5   21    3    8   -4   -3   -4   -2
-11    3   -8   -5   16    9   -9    8
  3  -10  -46   46    1    2   10  -10
 11   17  -36  -20   14   10    5    0

 13    7   -9   -6   45  -24    8    2
  0    8   20   17  -24   12   -7    1
 -3  -15  -13   46   20   -2  -13    1
-13  -11   15    2   10    1    3   -1

  0    0    0    0    0    0    0    0
  0    0    0    0    0   -1   -1   -2
 -9  -16  -69   31   26   34   17    7
 -6   -1    0   -1    0    0    0    0

  0    0    0    0    0    0    0    0
  0    0    0    0    0    0   -4    0
-20   -5  -82   18    3   22    9   -7
  6    4   -4    2    0   -1    2   -2

  0    0    0    0    0    0    0    0
  0    0    0    0    0    1   -1    4
 -5   15  -36   62   52    4    5   -7
  6    0    2    1    1    1    0   -1

-19    3  -20   19   -4   13    8  -11
-16    8    1   10   30  -14  -33    1
-11   10  -30   45   -4    3  -13   -3
 12    7  -22    3   -2    3   -2   -4

  0   -1    0    0    0    0    0    0
  0    0    1    0    0    0    1    2
  8   11   48   70   21  -10    9    4
 -9   -9   -6   -4   -1    0    0    0

  0    0    0    0    0    0    0    0
  0    0    0    0    0    0    0    2
 -1    2    2   80  -36  -15   -5  -10
  8    2    2   -2    0    0    0    0

  8   10    8   -8   12  -24    0   -1
  9   20   -2   -1   -2    2  -10   12
-13   -2  -43   35   15   44  -25  -10
 10    4   -5   -3    7   -5    3   -1

  1    1    1    1    0    0    0    1
  0    0    0    0    0    0   -1   -2
  9  -18  -72   69   -8    7   -5    7
  3    2   -2    2   -2    1    1   -3

  4   -1   10   -3    4   19   20    3
-24    6    9    6   15    8   18   18
 19  -36  -11   57   -3    4    7    8
 -3    2   -9   -2   -2  -15   -4   12

  3   20   -9   11   22   -4  -25   42
  5    1  -19  -10    9    0    5  -16
 10    2  -29   44   -3   17   -2   -9
  8   -1   -7   14   16   -1    1   -5

 16   -7   12  -11   33    6   14  -15
  2  -23    8  -26   10    2   -5    0
 -8    8  -38   38    5   -4    5    5
 22    1    7  -15    0    6   28    4

-12   -1   10    2    0   -2   17    7
```

```
 22   12   10   -4   29   25   18    5
  1    4  -39   27   17   31    2    2
-23   22   16   13   -7    1   -5   -4

  1    0    0    0    0    0    0    0
  0    0    0   -1    0   -2    0   14
-11   -7  -22   49   19   -4   39   17
-29    4    2   10   -4   36    1   23

 -2   -2    2    2   15    1    7    5
  8  -16   16  -19   20    3    9   36
 20    3   29   39    2    0   16   27
 10   10   22   14    3   16    8   13

  9    5   25    6   17    7   10   13
  3    5    7    5   22   18    9    7
 -4   -5  -11   50    5    4    8   -5
 -2   -4  -27   -4   20   14    9    7

 14    0  -27  -10  -17  -14   26    6
  2   10   12   14    0    5    9    8
 28    0    7   55    7   12   10    4
  7   10   11  -12    5    3    8    9

 23    2   -2    4   20   -1   14    2
 -9   10  -24   -9    0   10   12   11
 11   12  -25   49   29    2   13    7
-10   21  -17   11    1    3    5   -8

  0    3   -6  -14    2   18    9   17
  9  -19    9   -5    6   14    3   19
  1   27  -21   41  -15   20    0   33
 14   26   10    7   20    3   12   -3

 16   -1   -8   15    8    3   21    8
-16   -5    4  -29   -6    1   28   -4
 31    2  -26   37   13    2    8   24
  6   -9   10   29    2    7    8    7

-10  -10   13   11    2  -32    9   16
 23   14  -13  -15   13   24   27    4
 12   14  -18   31   23   17   -7   -2
  9  -14   -6  -17   20  -10    6    9

  0    0    0    0    0    0    0    0
  0    0    0    0    0    0    0    2
  1    5    8   89   -6   10   -1    2
  0    0    0    0    0    0    0    0

  0    0    0    0    0    0    0    0
  0    0    0    0    0    0   -1    2
 -7    4  -50   64    3    7    4    2
  0    0    0    0    0    0    0    0

  5   -2   -4    3    3   -4   -3    2
 -3    3    4    5   -6    1    1    1
 -2    6  -35   50   43    7   -7    7
-26   -5   21   24   15    3    6    5

 21   -8   33  -19   22    8   17  -11
  0    3   -2    0   -3    1   -1    6
 -8   10  -11    4   -5   -4    8    0
  3   -4   -4    1    2    4    4    8

  5   -7    9  -20    3  -22    1  -14
 13    6   -2   23   -7   -4    0    2
  4   11    3    6  -11   -7    4   -7
  5    5    8  -12    4    2   -3    7

  6   -7   20   -4   16  -20    7   -2
 16    6   12   11   -7   -7    3    5
 -4   -9    2    1    2    5   -9    1
-17   -2    6   -4    7  -10   -6   -7

 18   -9   12  -17    1  -24    4   -1
  9   14    3    4    8    2  -14  -12
 -8    4    7   -4    6    7   13   -1
 -4   -9    1   -1   -4    0    8   15

  2  -25    6  -11   24   -5   -5  -28
 12    8    6   -2   -3    8   -9    8
 -5   -1   -5   -1   -1    6   -1   -1
  8   -4   -2  -12    7  -13    1    2
```

14	-14	20	-18	12	-10	9	-2
0	1	-2	12	-10	15	17	26
11	16	-10	10	2	9	8	4
3	2	4	4	3	2	1	-5
12	18	21	18	12	-6	13	-6
18	-25	11	1	-5	-9	10	0
3	5	8	-3	7	-9	2	4
0	-9	0	5	-3	2	-8	9
16	-4	18	1	9	-30	6	1
13	8	15	13	1	-4	7	13
2	6	3	15	5	5	-6	1
5	1	2	0	0	16	-4	3
1	21	6	2	18	-43	5	-1
4	1	2	6	3	-1	3	1
1	0	9	2	-1	1	-2	9
-1	0	-2	-1	0	6	-2	1
10	23	7	4	-11	-32	2	18
7	2	3	6	12	3	3	19
6	5	6	16	2	19	16	16
2	8	8	13	-11	-15	10	2
2	-8	2	-13	24	-29	19	-20
10	1	10	-4	2	1	11	-9
2	-1	-5	9	-7	19	-9	16
18	2	1	11	0	1	3	7
3	6	13	4	10	26	28	10
28	7	7	1	14	0	7	5
-4	4	-2	3	3	3	7	-11
4	6	-1	0	-1	2	2	-3
16	-6	13	-31	17	-10	4	-6
4	-14	-1	4	12	-10	1	-5
15	14	-8	0	-5	1	3	3
5	9	20	7	4	7	-5	11
3	19	14	17	16	-12	18	-22
8	14	4	-2	12	10	4	-14
2	-3	7	3	7	-7	2	-6
-4	-2	0	-5	-2	-5	1	2
-7	-9	24	-11	-9	-36	5	-11
-12	7	18	-13	20	-2	-4	1
10	1	6	15	1	14	2	0
2	1	16	9	7	-11	0	13
24	-24	18	-18	14	-22	13	-11
11	-12	11	-10	11	-7	-4	-5
1	1	2	5	-1	3	-5	1
-4	7	-6	5	-7	8	-6	8
18	6	22	22	11	5	6	1
22	19	4	8	20	-9	19	-2
18	-6	33	0	-12	-9	6	-1
2	5	5	5	17	-5	-3	-3
11	1	9	-16	11	-18	18	-4
26	20	8	-10	-11	1	-4	8
7	0	5	3	2	2	-2	10
4	-4	-2	-4	-4	1	-1	-5
6	-10	18	-1	27	-17	10	-3
12	-2	-9	-7	1	1	7	-1
-1	-12	-6	-7	8	-1	-15	3
9	8	-7	3	-1	4	-1	1
6	-14	22	-16	5	2	5	0
11	-18	-3	6	-20	22	-3	-9
-6	6	-15	-7	15	1	11	-8
-3	8	1	-8	2	-8	-2	6
5	-21	19	-19	4	-7	0	-7
6	-8	5	12	-22	-3	-6	-13
-3	-1	-14	-2	-3	6	-8	1
-5	-7	11	-6	-10	-3	2	-5
9	-1	15	-12	6	-6	14	-19
11	-9	12	3	-3	-17	-4	8
-4	-3	-5	1	5	4	-15	-7
15	-7	-5	-6	-5	1	1	-3

20	-12	20	-15	3	-14	9	14
33	-6	6	-13	8	-2	-7	-6
-6	3	-3	-3	8	0	-3	-3
2	1	2	2	-5	6	-2	5
12	-7	12	18	10	18	8	-4
4	2	9	8	3	0	3	8
12	6	1	-4	5	25	6	9
0	-7	-7	9	-5	3	-4	-4
12	18	11	10	0	22	5	15
2	2	6	3	-4	-4	15	1
3	2	6	21	11	12	1	19
14	3	0	7	22	11	0	10
2	-15	15	-30	13	17	8	16
10	7	2	-8	3	11	-7	10
22	7	-10	12	-12	3	10	6
-10	12	-8	7	2	5	1	9
11	9	6	14	21	10	12	5
5	9	21	7	2	6	1	2
4	1	20	2	1	18	3	14
4	-1	10	7	11	1	-4	4
8	-22	13	-30	-4	21	1	4
9	12	-3	2	-6	2	-13	4
8	2	1	8	3	7	5	4
7	-1	8	2	7	8	0	8
-4	6	16	35	15	13	14	11
9	-7	11	1	0	7	10	13
8	-1	1	1	8	-2	2	1
3	2	-1	10	-13	7	7	-3
7	-15	14	-16	17	-18	14	-6
4	3	-3	7	22	10	15	5
-4	4	15	-11	11	15	20	11
0	1	1	2	-3	11	7	11
3	-12	16	5	-1	-37	15	15
10	-15	-10	3	15	1	-13	7
8	-13	-3	9	12	2	2	-8
0	-5	6	-3	-9	5	5	-4
26	-16	14	4	26	-22	3	6
4	-8	6	2	-4	16	7	11
1	-10	7	3	2	-4	8	9
2	-2	-2	5	-2	-4	-1	7
-10	-7	3	6	-4	2	-10	-12
-5	-4	19	16	1	-16	-9	2
0	-10	7	9	3	-8	8	12
-11	-6	-1	-13	-20	-3	-5	6
17	-14	-5	3	12	14	8	12
25	-6	21	21	-8	10	4	12
-4	10	-9	3	9	11	4	0
-15	2	-14	1	1	4	-4	0
-9	-4	-1	-3	3	6	6	-6
-4	-10	8	14	-3	2	-19	-12
11	0	1	20	-2	6	-6	-27
-17	10	-17	-14	8	-9	3	-8
-13	-12	-4	16	12	-2	-11	-7
-13	2	7	5	-18	-16	-12	-1
1	-2	-9	-12	-6	-2	9	2
-3	-22	-14	-4	7	-7	2	-1
-8	-7	15	-8	18	15	16	15
-37	-4	15	11	-1	-12	3	-3
6	6	-5	0	-5	-3	1	9
-11	1	-8	-1	2	-6	0	3
7	-6	-12	-5	10	13	-4	-18
-21	-3	16	6	-7	-15	-9	-12
-12	1	10	-1	-1	-2	4	-2
1	-4	-1	-16	-9	12	9	5
-5	-14	3	9	26	4	3	-28
-24	-6	5	4	13	3	-1	5
-1	3	1	3	-5	1	0	3

-8	-7	3	7	-5	3	0	4
2	-4	6	10	26	25	10	-6
8	-6	11	15	-3	-6	-7	2
14	5	-1	9	-12	0	-4	4
1	-10	3	-3	-2	-2	-1	-6
8	10	-10	-15	17	19	0	-8
7	-3	5	7	-1	-13	-7	7
13	1	13	-12	12	17	26	1
3	18	-6	-5	5	4	1	8
5	2	0	3	0	0	3	2
5	2	13	7	4	4	-5	0
1	4	8	11	0	4	2	13
23	-47	11	8	4	-4	-3	2
-4	-18	5	4	17	1	8	12
-12	1	20	7	3	-12	-11	2
12	16	1	-6	-16	-13	-3	-6
-5	-3	-12	4	-9	5	1	10
0	-11	7	4	8	7	-1	3
-19	3	8	32	8	-19	4	2
15	-12	3	-16	9	1	1	-2
8	-2	6	5	-1	-4	-8	11
1	3	-2	4	32	14	-23	-9
12	10	15	22	-2	-1	0	10
6	4	4	-8	2	14	-4	1
-8	0	1	4	3	-8	1	4
-12	-17	-8	6	13	16	-8	-20
16	-1	21	10	11	-19	-5	-9
18	7	7	-6	-18	-7	2	13
8	2	-9	-12	4	2	16	-5
0	4	11	17	7	12	5	12
25	-1	-8	10	-6	7	-7	-4
8	9	3	7	-16	3	0	8
-2	-2	3	-18	-5	-4	4	1
-6	-3	-16	6	6	17	2	-3
-17	-9	11	12	2	11	8	-20
1	1	2	0	-6	-2	-12	-21
-15	-9	-8	-1	-8	-6	-2	0
7	-11	-9	6	6	3	16	8
-5	4	26	23	3	-10	0	4
2	2	4	-4	-12	-2	10	12
0	-11	-16	-10	0	3	-10	0
16	-5	-6	10	13	27	4	-3
13	-2	5	15	5	2	-4	3
12	13	7	-11	1	0	12	11
13	2	8	-15	2	9	8	3
8	-5	3	4	3	9	10	-11
25	14	8	14	5	-2	-21	12
10	2	2	-7	2	3	2	0
-3	-1	-6	-5	-16	-1	8	2
5	-1	-11	1	9	5	8	-7
12	-13	12	4	1	-4	-1	-1
29	27	15	10	-6	2	4	-3
10	-21	-11	-9	-1	-6	-3	-9
-3	-6	-6	-1	-5	11	-2	0
-31	-5	3	11	5	-1	4	-3
7	5	5	-10	-13	-10	12	4
-2	-15	-7	2	-9	1	-10	-3
-7	-3	-8	17	36	-5	-7	8
-20	-8	8	12	-1	1	0	3
4	1	3	-10	4	1	-3	-2
-3	-2	4	-10	-7	-1	2	3
-3	-13	9	-5	6	22	3	-23
-7	-10	17	17	-14	18	-8	-8
4	2	2	-8	-8	-3	4	6
7	-1	0	0	0	-3	-3	-12
-10	-3	-3	-15	3	9	-9	-23
-18	-13	13	12	0	-2	8	1

2	-1	-12	-7	14	-5	1	2
6	-22	-8	-10	28	-9	14	7
1	3	-1	2	7	13	-7	-2
-3	1	9	6	-2	-3	-2	4
1	2	-2	-10	22	-2	-7	2
-5	-10	-27	-11	16	12	-7	4
-6	2	1	3	0	8	12	2
-4	-3	15	58	-4	10	2	2
0	2	6	2	4	2	1	1
1	-4	5	1	1	4	1	1
1	10	5	0	7	21	6	14
16	3	17	13	13	16	6	1
6	-4	5	12	-4	1	8	7
3	-2	6	-6	8	-1	4	5
-2	-6	11	-8	10	15	8	0
-15	-6	8	33	18	2	11	15
1	5	15	0	-4	15	1	4
7	10	4	-13	0	-4	3	8
2	-7	-2	0	2	0	5	4
-16	-14	38	12	12	7	4	6
-1	0	3	0	-6	2	2	0
1	6	-1	0	2	0	1	4
-4	8	1	18	5	14	3	12
-17	20	19	5	8	11	3	11
9	3	-8	7	17	9	15	2
-11	-10	-5	5	15	7	2	6
2	-7	5	38	16	19	4	5
-20	-13	4	0	6	-4	2	4
6	-7	-2	8	-7	-5	3	6
-3	-4	-3	-2	-6	7	0	4
-12	11	-15	8	14	3	22	7
2	-11	14	22	2	19	-6	19
3	1	14	-18	-6	2	-8	-2
-6	-5	-7	5	-4	-8	1	1
7	8	-21	25	-6	12	-4	-5
6	-10	10	0	-12	1	-5	18
4	-15	14	1	5	-1	-7	8
-7	1	9	-3	1	10	0	1
10	9	-15	32	2	8	-7	11
-8	-18	-6	2	-16	-9	3	-3
3	-1	-5	1	-2	4	-8	1
-4	0	-11	-3	5	1	0	0
0	14	-25	23	3	22	10	7
-2	0	8	7	10	0	0	0
2	3	-10	3	10	0	7	0
10	0	-5	-1	1	-7	2	1
0	12	-18	25	-4	-5	-10	13
-6	3	21	7	16	0	10	3
5	-6	-3	-7	5	2	-6	3
9	4	12	-8	3	-2	4	2
15	31	-20	27	-7	10	-10	15
-8	9	-5	4	-3	3	6	5
-2	11	-2	-12	-2	6	2	1
-1	-1	1	1	1	3	2	1
-4	12	-23	13	-6	12	4	2
13	-3	-7	6	-19	5	18	-7
-7	1	1	7	-7	16	0	3
0	3	8	-12	9	-11	7	4
1	29	-22	3	6	-5	12	0
11	-14	6	1	4	-3	-2	6
-13	4	1	12	3	1	9	-11
-1	-10	16	-7	-1	-11	9	3
4	4	-23	36	-8	-5	1	-19
3	-6	-1	13	-7	-5	9	4
-11	2	5	-3	3	1	-1	-6
-4	-4	2	-2	-1	3	-2	-5
10	19	-17	6	-4	2	-4	-2

13	-5	2	2	-7	-13	-11	-3
-6	9	-9	1	6	-5	-9	-5
-7	-18	9	-11	-11	4	4	8
-3	16	-16	9	-2	18	-16	12
11	-11	16	-18	6	-13	8	-2
8	3	-16	4	11	10	-3	-1
5	-8	4	-9	-4	9	3	0
15	14	-23	3	7	-5	-6	-8
17	2	12	2	-12	-8	-1	13
3	9	1	1	15	19	-1	4
2	1	2	3	1	-3	3	5
5	32	-47	10	1	-5	11	4
0	-7	-2	2	-7	1	-4	6
2	6	2	-4	-2	2	-4	0
-6	1	2	-5	-1	-2	-4	-3
8	20	-21	10	-9	-7	12	-16
4	1	-5	6	-11	9	4	-7
28	-11	2	3	-6	4	-8	10
5	-5	9	9	-1	-2	-5	6
3	38	-25	23	-18	6	-10	3
6	-8	1	-10	2	10	0	2
2	-7	5	-4	8	-1	0	-3
3	3	1	-1	-4	0	0	-4
5	20	22	16	-18	24	-12	2
7	-14	10	-3	7	2	2	-10
1	-8	-1	8	1	4	2	4
-9	5	-8	-18	5	-13	10	-11
8	14	-16	-12	-11	9	-6	-3
-7	-25	5	6	-16	-7	2	10
-1	-7	-3	-9	4	16	3	3
-3	-3	13	15	4	-3	-7	13
9	16	-23	19	-19	7	-5	-3
11	-15	21	-21	18	-16	6	-1
10	10	-14	18	-15	16	-5	6
5	-9	13	-17	13	-10	10	0
-4	8	-24	4	-21	8	9	-18
4	-11	17	-6	-9	5	-2	-2
15	2	-3	-2	1	-2	-13	7
10	15	-11	-8	3	3	-1	-1
17	14	-32	6	-17	5	0	-2
-1	15	16	-5	-5	1	9	-2
8	-3	-2	4	-4	-2	1	-3
7	0	4	-3	0	-5	2	-7
6	24	-12	22	3	8	4	-14
8	-7	5	6	1	6	-12	6
10	15	11	4	6	9	-4	-7
9	10	-1	2	11	-5	3	15
12	17	23	3	-1	5	1	2
-1	-9	1	-3	1	8	17	-5
0	11	-11	-2	4	7	-27	0
1	-7	-8	2	7	9	3	5
10	12	-.0	12	5	-4	2	-1
5	-24	2	-8	-17	6	5	19
-2	12	-7	16	-14	-4	1	4
13	-3	5	-16	4	-1	1	1
9	31	-17	11	-3	10	7	-7
2	1	4	2	-1	-3	4	11
-8	-5	4	1	-6	15	1	-28
3	8	5	-6	-2	17	-4	2
19	11	-26	16	-7	0	2	-7
-15	-13	9	-12	27	-3	4	8
1	-6	-6	4	-1	11	-7	-6
0	-3	4	-6	-7	-6	-1	-3
18	10	-32	16	-9	19	-3	-4
8	-7	-3	8	-2	-11	-16	-6
13	13	-1	-6	-2	10	-9	-2
-3	0	4	9	-2	11	6	-6

4	9	-33	19	7	4	36	-12
-1	-3	-2	9	8	2	-4	9
0	-8	-1	1	-4	0	3	-4
3	0	0	6	2	-6	-2	0
7	25	12	15	24	2	24	1
4	-4	0	9	9	2	6	4
13	3	1	3	1	5	5	-3
7	1	3	2	4	4	0	1
6	19	20	8	9	9	4	5
7	13	-3	11	13	5	6	9
1	11	4	0	26	11	6	3
12	7	3	6	9	1	1	7
6	15	23	19	9	3	16	3
-4	6	5	6	1	10	14	16
0	2	13	2	8	3	3	6
1	1	-5	2	-4	12	-3	8
4	14	20	16	12	1	6	0
9	3	16	4	16	10	7	5
-4	5	18	4	11	3	4	4
3	-7	7	13	3	3	7	2
3	22	-30	-1	3	18	9	9
11	-2	2	-16	12	14	4	0
4	-5	3	-1	12	-20	10	6
2	-2	-12	-12	6	10	3	11
7	15	21	2	4	5	9	9
7	33	3	7	14	6	10	8
0	12	-1	2	4	5	0	2
0	-7	4	2	1	0	8	3
0	-7	3	12	-6	0	-4	8
2	0	-15	14	-7	2	-3	31
0	14	-15	14	-4	1	10	15
-3	1	2	1	2	5	1	8
5	-2	0	1	3	3	6	3
2	-1	1	-4	0	19	18	-11
10	11	5	21	2	6	3	10
0	-6	13	-2	-1	5	9	-2
1	-9	0	-5	-15	0	4	8
3	8	12	8	-2	-13	-2	-39
-4	4	-3	5	1	-4	3	3
5	10	2	3	5	3	8	2
6	-9	-8	6	12	12	-18	23
-15	4	2	-5	13	-20	7	-7
-12	7	-12	14	1	6	-3	1
9	-8	1	0	3	7	-6	7
13	-18	3	4	30	19	6	10
1	-14	-4	-7	5	35	11	25
8	9	-4	19	3	7	-8	18
5	1	4	10	9	14	-4	3
-1	-6	-9	4	4	-9	0	20
3	0	7	11	-17	-16	11	-20
-14	-6	4	1	2	19	6	-8
3	-15	-5	6	3	-14	2	7
6	1	-8	-2	-3	-5	-8	3
1	21	16	3	-2	-14	-4	-9
-2	13	14	18	19	14	5	-13
2	-10	3	-3	5	5	-1	1
-5	-1	-2	-6	-7	-11	-4	5
-1	5	3	0	2	-3	18	-19
4	16	-22	14	-11	-2	1	-22
11	-1	2	1	-10	11	-12	7
4	1	-1	5	-5	-9	12	1
6	5	9	12	23	-26	20	-1
-11	14	5	13	-2	-2	6	5
1	2	6	-9	5	10	11	-4
-1	-1	7	1	-4	-3	-16	8
-1	15	9	-7	-11	-22	10	-11
9	16	4	-2	10	13	16	6
7	4	-8	1	-14	-7	4	-7

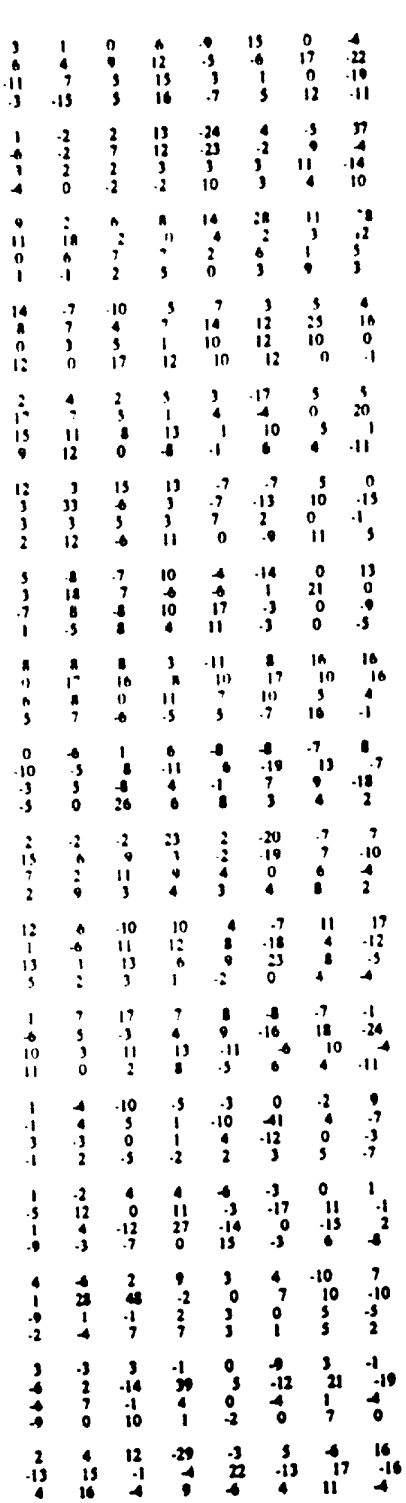

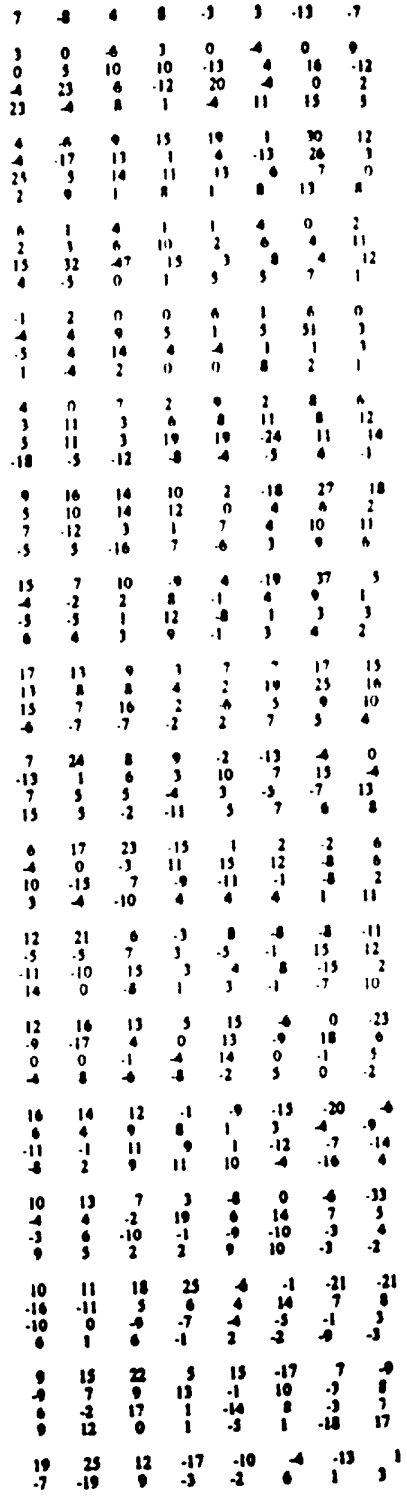

-2	4	-14	-11	7	-1	-9	-5
-1	7	4	-3	1	-5	-1	0
8	20	-10	-3	3	-24	-2	-6
-12	0	6	14	11	7	7	4
5	-12	-10	-8	-1	5	4	-4
7	16	6	-14	-2	-1	-11	7
18	16	1	17	-6	-15	-3	-5
19	-1	-2	8	8	2	-19	12
8	12	3	0	-1	-1	14	4
1	9	1	12	10	7	5	-3
12	18	7	7	1	0	0	13
-4	1	-2	9	1	6	1	0
21	15	8	1	-19	25	9	-13
12	2	7	5	1	-3	1	-3
16	13	9	-4	2	-2	-19	-1
-4	-7	-6	18	18	14	4	-5
-3	-6	-14	-19	-12	-1	6	-10
17	7	-13	-12	-4	-10	4	5
17	27	14	4	-2	9	-8	-4
-6	0	-11	14	2	-7	-3	-3
-3	-2	12	13	1	16	-9	-5
11	10	3	-2	5	-7	-7	11
17	7	-2	16	28	-14	-8	-7
10	15	15	7	17	8	-1	13
-7	4	-11	-12	0	0	3	2
7	-3	6	-6	-16	1	-2	1
11	29	15	-9	-4	-23	-4	-6
9	2	9	-7	3	-8	-4	-13
18	8	-2	-6	-5	1	-14	6
2	-5	-5	-6	-2	-3	-5	4
13	12	18	18	2	-35	-17	7
-11	3	9	6	-2	-3	-4	10
3	3	-7	-2	2	0	0	-4
0	-4	5	-6	4	10	-1	-3
11	19	20	1	4	-14	-13	-9
11	-2	17	0	-1	-1	-1	-1
-8	-5	5	0	-8	-1	-1	5
2	3	21	-12	-24	-2	7	5
15	15	17	-15	-22	-14	-4	3
-3	-11	1	-7	10	18	10	1
-3	-6	2	8	0	-7	1	-2
2	1	2	-9	2	1	4	-3
13	45	17	8	2	-5	2	-16
2	8	-15	8	5	4	7	-1
2	-6	2	-6	0	-3	-9	0
7	-1	5	2	-3	-3	5	-1
18	1	18	-8	-10	-12	4	3
12	22	6	20	9	3	10	2
-3	-10	3	9	-3	6	-1	10
2	-3	4	-2	3	2	-18	-3
10	9	9	-5	-21	-35	-16	-18
-12	-1	-7	-6	-19	-15	4	12
9	4	2	-7	1	14	0	4
6	-1	2	-7	1	1	4	-4
8	31	35	-17	1	-8	-6	-5
-6	-7	-2	10	6	-3	3	9
-2	-6	3	3	-3	5	6	0
1	0	-3	-5	-4	-2	0	-1
4	18	7	-8	-15	-6	-16	-1
18	12	19	3	4	2	8	8
-5	0	-12	-8	-5	10	1	0
4	0	16	-3	11	11	-6	-2
15	27	-10	-17	-22	-23	-14	-1
-7	-4	-2	20	6	-7	-5	15
4	32	-11	9	-8	-3	-4	11
-4	-1	-6	-8	-5	-4	-7	-2
4	22	2	-7	-11	-15	-10	-17

0	2	11	15	12	7	6	8
-18	-10	-12	-6	3	7	3	22
14	-7	-2	-5	-7	-13	7	-1
13	18	24	9	-19	-4	11	-9
8	13	4	2	8	-1	10	14
0	-12	5	0	5	10	1	4
1	5	11	1	-4	2	9	0
19	15	1	5	10	4	27	8
8	6	10	5	11	4	5	5
0	11	-14	11	9	4	8	8
9	6	-5	4	1	1	4	5
1	18	14	-13	9	14	7	15
-1	12	4	13	12	20	12	10
7	12	13	1	6	10	3	5
8	4	13	10	6	3	3	9
14	19	8	5	2	6	5	5
-1	-5	11	-28	6	18	2	4
14	11	42	43	2	9	23	20
32	6	5	0	6	0	5	9
11	8	-1	-14	12	7	2	7
2	16	-3	10	-7	1	-1	7
-10	1	23	80	42	18	9	13
-11	18	1	0	2	0	1	5
-1	-5	0	2	3	3	2	3
0	-6	-3	-3	2	7	2	0
3	-2	-15	34	47	17	20	10
1	9	-21	3	13	25	8	14
6	5	-2	2	-2	2	5	6
7	-1	1	-3	-13	5	3	9
-19	-17	-79	-2	-7	-12	6	8
2	-2	-1	-1	-13	7	1	6
0	0	0	0	0	0	0	0
0	0	0	0	0	0	-1	1
3	0	-87	4	-11	6	9	16
8	-1	5	0	1	0	1	2
6	-5	-24	2	-9	5	0	-7
3	7	16	-3	-16	-14	18	0
-9	15	-28	-14	53	-17	-6	14
-1	-28	-10	-3	-14	-7	-15	19
0	0	0	0	0	0	0	0
0	0	0	0	0	0	0	3
0	-13	3	-53	63	-22	16	19
-11	1	-3	0	-3	0	1	0
0	0	0	0	0	0	0	0
0	0	0	0	0	0	1	1
-6	-1	-43	43	65	2	-4	13
1	9	2	1	0	1	1	0
1	0	0	0	0	-1	1	1
0	0	2	1	1	-1	1	3
1	-23	-55	-61	-28	3	-4	-6
8	-4	1	2	-1	1	0	0
1	0	1	-1	0	-1	0	-1
-1	1	1	0	1	-1	-4	9
-19	-48	-46	-52	-12	11	-14	5
-10	0	0	0	-2	-1	0	-1
-3	0	-4	-1	-1	2	3	-7
3	1	1	-1	0	-3	0	-7
-7	3	-51	-61	-21	-4	-21	-16
14	-11	8	-7	-5	3	2	1
0	0	1	0	0	0	0	-1
0	0	0	0	-1	1	-3	9
-11	56	-67	-6	13	-1	7	0
-9	1	-1	-1	0	0	0	1
9	14	14	-2	-10	-10	-5	9
-8	1	30	-23	-7	8	8	23
10	2	-27	-1	57	-17	4	22
2	-5	-6	-12	-7	2	-9	-4

```
 5   1  -2  12  -3  -2  -3   2
 0   6  -2   4  -6  -8  16   0
29  15  29 -55  29  24  10   3
13   6  -5  10  11  21   2 -14

 2   4  -6  26  11  10 -10 -23
-20  27 -24   3 -10 -11  25  13
 5 -10 -36  -9  49  -7 -13   3
13   6   0  -2   3   1  -4  -3

 0  -1   0   1   0   0   1   0
 0   1   0  -1   0   0   1  -1
12 -12 -64  26  29  15   7  37
12   3  14  -5  -8   8  -2  10

-4  19 -16 -11  14   8  19   5
22   3 -21 -11  -6  -1  11 -11
24  10 -40 -23  20   8   5  17
-6  13  14   3   8 -20  28   3

12   2  14  10  26  18   4  22
 5   2   8  21   1   3   0  19
24 -12 -40 -14  29  15   6 -15
 1  15   2 -19   7   4  -3 -12

17   0   7  13 -11  -5 -19   2
38   3  -3 -21  -4  -6   1   7
 5   1 -10 -40  35  -2   8   8
-8 -10  33  -9   4   4  -2   0

12  -2  29   7   2 -24   1  16
16   7  -2  10  -2  -2   2  13
15 -37 -40 -22  33 -11  -1  10
10   8   8   6   0   9   2 -12

-8  15  -2  -9 -17   7  19   7
 4  14  27  12  10  11  11   4
14 -15 -48 -13  18   5  -9   0
-11 36   4   2   5   5 -12 -15

 0 -12   4   3  -5   7 -14   5
-18 -24 -15  -6 -20  -8  -7   1
-28 -33 -38 -40 -10 -18  17  -5
 4 -12  -5   3 -13   5  -7   4

 0   0   0   0   0   0   0   0
 0   0   0   0   0   0  -1  -1
-9   3 -60 -49  45   5   6  -1
 0   0   0   0   0   0   0   0

 0   0   0   0   0   0   0   0
 0   0   0   0   0   0  -1  -1
-9  -3 -60 -49  45  -5   6  -1
 0   0   0   0   0   0   0   0

 0   0   0   0   1   0   0   0
 0   0   0   0   0  -1   0   0
 2   3  29   9  55 -11  32   8
-13 -36  37  -7  11   4   3   0

 0   0   0   0   0   0   0   0
 0   0   0   0   0   0   0   0
-1   4  -4 -39  63 -30 -17  28
10  -6 -14   7  11  -9   7   9

 0   0   0   0   0   0   0   0
 0   0   0   0   0   0  -1   0
-2  13 -32 -90  51  22   7   4
11   6 -13 -20  -5   9  -4  21

 0   0   0   0   0   0   0   0
 0   0   0   0   0   0  -1  -1
-9  -3 -60 -49  45  -5   6  -1
 0   0   0   0   0   0   0   0

 0   0   0   0   0   0   0   0
 0   0   0   0   0   0  -1  -1
-9  -3 -60 -49  45  -5   6  -1
 0   0   0   0   0   0   0   0

 0   0   0   0   1   0   0   0
 0   0   0   0   0  -1   0   0
-2   3 -29   9  55 -11  32   8
-13 -36  37  -7  11   4   3   0
```

```
 0   0   0   0   0   0   0   0
 0   0   0   0   0   0   0   0
-1   4  -4 -39  63 -30  17  28
10  -6 -14   7  11   9   7   9

 0   0   0   0   0   0   0   0
 0   0   0   0   0   0   1   0
-2  13 -32 -90  51  72   7   4
11   6  13  20   5   9  -4  21

 2   8  22   1   6  31   3  25
 1  -3  11  15   3   2  13   4
15   9  37  18  37   7  13  12
25 -11 -11  10   7  22   7  16

10  14 -10   4  -5  -1   3   7
13  16 -15   5  11   5   8   1
 7 -27  49 -12  22  17   2   9
-1  -9 -15   2  41   1 -17  18

 9  -4  -3  15   4   3   2   4
 3   7  -8   7  17   5   7  19
 9  36  17  38  48   1  18  11
-2 -13   4  -8  -5 -10  11  21

-13  15   2   4  -5   1   1  -2
 7 -10   3   1   0  -6 -11  11
20   8  51 -17 -41  17  15   7
 8   4  16   2   1 -32   6  17

 8  -8  -5 -18   6   4   8   3
-4   0   0   2  -4   1   8   5
30  30  70   8   8   2   0   2
 1   7  -1  13  -7  -6   2 -11

-7  -8 -10   9   6 -13 -14  11
25  13   5  26   5   2   5   5
 4   8  33   0  38  12   6  -4
 6  13  34  25  25   1  -5 -19

 3  18   4 -17   7  -8   1  20
 5  -1  -2  -5   8  -8  15 -35
43  24  31  -5 -12   5   1  -3
 3  -2  -3  -3   8  -9   2  -9

 0   0   0   0   0   0   0   0
 0   0   0   0   0   0   1   0
10   2  76  24  22   2  -1  11
33   4   1   4   1  -1   0   2

-1   0   1   0   1   0   1   0
 0   0   0   0   1   0   0   2
13  24  70  32   5  26  -9  21
-15 -6  -2   2   4   2   1   1

-4   5   4 -11  22  -4  -2  10
-11 13 -21  -4   0  17   4   7
-34 10  52  11 -46   2   0  -5
-1   0   4   2   1  -9  -7   1

 1   0   0   1   0  -1   0   1
 1   1   1   5   0   0   1  -3
 9  -8  64  -1 -61 -13   3  -3
10  -5   3   1  -1  -1  -1  -1

 1   0  -1   0  -1   0   0   0
 0   1   0   0   1   1   1   2
-2  10  79 -31  27 -10  -1   0
 8   3   1   1  -1   0  -1   0

12   3  26  10  10 -19   6  -9
-15 -4   3  10   6 -16 -19  11
10   3  44  18 -30   5  -9   5
 4  21  10  20 -25  14 -17   8

 0   0   1   0   0  -1   0  -1
 0   1   1   1   0   0  -2  -4
-8   8  69  13 -19  26 -17 -25
 6  16  22 -12  -6   2   5   9

-1   0   1   0  -1   0   0  -1
 1   0   1  -2   0   0  -1  -4
-15 -34  56 -33 -42   9  10   9
```

9	6	11	-8	-6	0	5	15
2	10	-3	-14	-35	-15	7	-1
14	-18	-1	8	-26	15	-15	6
22	-18	33	9	-32	0	3	-9
7	-11	-1	4	30	5	1	9
15	4	6	0	-11	5	6	9
6	6	2	14	10	-1	-25	-24
-4	2	37	-1	-29	2	9	14
17	22	33	-2	-25	10	11	11
5	0	18	2	21	12	33	22
21	7	7	9	15	7	16	-7
0	7	44	-14	25	10	-4	5
8	15	-4	10	9	5	16	-1
13	3	12	12	25	8	8	23
3	22	-8	-18	12	15	19	9
0	0	49	-9	-15	27	-15	-9
-8	12	-7	-16	5	13	2	13
6	12	2	7	-9	20	12	14
5	13	22	-17	-4	-8	7	2
2	-13	43	-15	-30	-5	4	27
27	10	27	5	-10	-10	0	-18
0	0	0	0	0	0	0	0
0	0	0	0	0	0	1	0
10	-1	70	18	-52	-2	-7	-1
0	0	0	0	0	0	0	0
0	0	0	0	0	0	0	0
0	0	0	0	0	0	1	0
10	-1	70	18	-52	2	-7	-1
0	0	0	0	0	0	0	0
13	15	16	20	13	2	11	5
5	8	2	3	23	24	7	30
30	11	43	15	15	5	3	15
1	14	8	23	9	3	11	4
-1	0	1	0	-1	0	0	-1
1	0	1	2	0	0	1	4
15	34	56	33	42	9	10	9
9	6	11	8	6	0	5	15
2	10	-3	-14	-35	-15	7	-1
14	-18	-1	8	-26	15	-15	6
22	-18	33	9	-32	0	3	-9
7	-11	-1	4	30	5	1	9
15	4	6	0	-11	-5	6	9
6	6	2	14	10	1	25	24
-4	2	37	1	-29	2	-9	14
17	22	33	-2	-25	10	-11	11
5	0	18	2	21	-12	33	22
21	7	7	-9	15	7	16	-7
0	7	44	-14	-25	10	-4	5
8	15	-4	10	9	5	16	-1
13	3	12	12	25	8	8	-23
3	-22	-8	-18	12	15	19	9
0	0	49	-9	-15	-27	-15	-9
-8	12	-7	-16	5	13	2	13
-6	12	-2	7	-9	20	12	-14
-5	13	22	-17	-4	-8	7	2
-2	-13	43	-15	-30	-5	4	27
-27	10	27	5	-10	-10	0	-18
0	0	0	0	0	0	0	0
0	0	0	0	0	0	1	0
10	-1	70	-18	-52	-2	-7	-1
0	0	0	0	0	0	0	0
0	0	0	0	0	0	0	0
0	0	0	0	0	0	1	0
10	-1	70	-18	-52	-2	-7	-1
0	0	0	0	0	0	0	0
-13	15	16	-20	13	2	-11	5
-5	-8	2	-3	-23	24	-7	30

30	11	43	-15	15	5	3	15
1	-14	8	23	9	3	11	4
-18	16	-4	7	-15	31	-13	9
-12	20	0	-6	6	12	4	-2
-3	3	0	-1	3	1	-2	3
6	1	0	4	2	-3	1	5
5	38	-4	13	15	8	1	11
-4	2	9	1	4	13	7	12
2	0	2	7	2	6	2	3
-4	3	15	6	1	1	2	11
22	47	26	9	5	3	7	2
2	4	2	2	0	3	4	3
-3	3	3	2	3	7	1	1
-5	1	0	5	5	2	2	3
-16	14	-6	2	2	7	4	7
-7	4	-3	14	19	7	17	14
6	-29	19	26	13	-5	-1	-4
14	21	3	1	0	6	1	7
-11	29	-3	5	11	4	10	6
-22	1	-10	3	4	5	5	2
-7	2	-12	-12	3	8	-2	18
-5	9	-3	-1	14	2	7	14
12	28	3	5	7	9	2	0
1	2	0	4	3	7	4	2
14	4	-1	8	14	-4	17	7
-2	-2	2	-9	7	19	8	9
-18	31	8	-22	5	15	15	10
10	1	7	6	8	6	-1	2
3	12	-1	3	5	1	4	6
1	0	-10	7	4	2	-4	3
-30	53	12	-4	3	2	3	3
1	0	5	6	-4	-5	1	7
2	0	3	1	5	1	2	0
-1	2	4	0	0	2	0	-2
-18	27	-2	-3	-8	4	-2	3
2	-11	-8	10	-4	-8	-2	0
0	8	0	9	11	-16	-6	1
-3	13	-13	-10	25	-15	0	1
5	35	-8	-1	11	23	-3	-14
-2	2	-6	8	-2	17	0	7
10	-2	13	-17	-2	-2	11	11
2	-14	-3	-2	1	-8	-5	12
9	29	3	7	-10	2	3	0
0	9	5	-3	-10	1	5	10
6	3	-9	-20	-4	-6	0	1
17	12	9	-8	1	3	0	9
-16	15	-19	18	15	16	18	17
-16	13	-14	17	9	15	17	13
-7	9	-5	4	-4	3	0	3
7	-6	7	-9	7	2	9	-9
-10	21	-2	7	-7	12	-17	13
-2	11	3	20	-11	5	-6	-4
0	-15	5	-9	7	11	7	-1
-10	8	3	-9	9	-5	-2	-8
-22	23	-5	15	-4	16	-12	-3
3	9	-2	-1	2	-8	-16	-2
4	3	-6	-2	12	-7	2	-6
2	-14	11	-7	6	-2	-1	-4
-17	34	8	-4	-6	4	8	1
16	4	6	3	-1	12	-15	-1
4	6	-6	-7	0	6	1	2
2	-2	3	3	-2	-3	-6	8
-18	18	-2	2	1	10	-21	18
-10	-3	4	0	-19	20	4	-3
8	2	1	6	1	-3	3	1
-1	5	3	-11	5	-7	1	-1
-14	15	3	2	-8	10	-13	12

-15	13	-8	6	-10	-4	-9	14
2	24	-18	-7	-11	13	14	8
-2	-6	-1	3	7	-4	-4	-7
-12	20	5	13	-10	-1	-6	15
-1	8	-10	-3	0	17	-19	-6
-1	2	-3	8	0	-16	2	3
0	-2	-9	8	1	0	9	-10
0	32	-5	-9	5	-1	11	13
3	8	-11	11	-8	0	-14	-2
10	7	4	6	10	1	12	2
4	10	6	4	0	4	10	7
14	16	-7	10	11	11	11	11
13	18	-15	8	-11	16	9	13
7	8	-11	12	6	7	5	3
-5	9	-1	4	-4	7	-3	8
-27	24	5	-1	-5	8	7	12
-3	4	-1	3	-11	-9	-5	13
0	10	7	13	5	1	9	4
3	7	2	13	-3	5	-2	-17
-19	23	1	15	-18	-10	-6	12
-3	8	0	12	-10	-12	-4	-4
-10	8	2	4	-8	-2	-3	13
-6	-2	-3	2	4	5	11	2
-12	25	2	4	-3	24	-6	3
11	14	21	0	-3	-3	-8	1
0	7	3	0	-6	3	6	-7
1	2	5	-4	10	-1	9	-2
-8	24	7	-6	-12	16	-1	13
-21	11	-6	2	-12	3	9	0
11	4	1	-7	1	4	3	-8
-6	3	3	3	-8	0	4	8
21	25	14	13	-18	-13	3	4
5	0	5	-4	0	-3	12	4
3	7	5	5	-2	2	-10	3
-9	2	6	-15	7	1	1	-5
-16	23	10	-2	-1	4	1	3
3	32	-2	-5	10	9	-4	-1
2	-6	-1	9	12	14	-1	-6
-2	17	-9	-4	-6	7	3	-8
-8	50	2	5	10	-11	0	0
-3	6	0	7	-2	-3	0	-3
-4	6	-5	2	0	-9	10	3
-7	1	-3	-2	-9	-6	-2	1
-17	28	-2	0	-9	2	5	1
-1	-4	0	0	-27	19	-12	5
-14	7	-6	-3	2	10	2	-4
5	4	-7	-2	7	1	4	-9
19	22	-6	-6	22	3	5	3
-8	20	-5	-14	1	1	2	20
6	16	14	3	3	4	1	5
-7	5	-6	-10	-6	3	-14	1
-14	29	13	-8	-10	8	4	-6
-6	4	-7	5	12	1	11	14
1	-7	-9	2	-9	-11	4	0
7	-1	4	10	20	4	-11	-1
-9	18	1	4	-29	7	1	12
-9	-1	-1	-2	2	-2	-8	9
5	-15	-13	4	2	-4	-7	-5
14	-6	-34	-10	1	-3	-13	-3
-9	38	8	24	4	11	-11	-6
-12	-2	1	1	-8	-11	-2	-5
-8	-15	0	8	-7	1	4	5
8	-1	11	-2	-1	-3	-5	-5
11	-20	24	-4	1	-11	4	15
-28	0	-1	-10	10	10	5	-6
2	-6	-2	7	-2	1	-3	-6
1	-7	12	2	7	-1	-2	0

10	-9	27	-23	-17	--	-6	20
-17	14	-1	5	-9	5	5	-7
4	6	9	2	8	0	1	0
-3	-3	-8	-5	-2	5	12	-2
19	10	9	4	16	1	2	17
29	9	11	-16	7	4	4	5
1	1	2	3	-4	3	12	5
6	2	-4	5	1	4	10	4
10	20	14	24	11	5	9	9
20	16	5	10	6	6	2	1
5	4	8	16	5	2	11	5
11	9	11	4	1	1	5	4
11	9	19	3	4	24	14	5
17	36	2	-4	7	17	3	2
5	1	-4	-7	-3	2	4	1
1	1	-12	3	3	2	10	3
18	-19	19	11	19	19	4	10
6	13	4	5	3	8	12	2
2	6	6	7	12	15	16	16
1	18	20	-4	10	0	3	9
9	-21	12	20	3	0	9	5
-13	15	-5	5	24	6	9	2
2	5	2	-7	7	5	2	5
3	15	-1	1	2	4	0	7
16	18	15	13	10	2	11	14
11	4	12	5	20	12	10	8
11	2	7	9	3	0	5	16
5	6	-21	-4	5	0	1	6
8	26	9	-13	-10	6	11	2
4	7	-19	8	-6	11	16	12
5	0	8	-7	6	5	9	17
10	10	3	5	2	11	10	4
17	-11	22	-3	18	5	1	3
-5	4	-27	14	-7	5	5	-4
11	-10	13	1	1	1	-5	-6
-22	10	-7	-7	13	-15	5	-4
14	-17	13	-7	0	3	-6	13
-14	9	-1	-22	19	1	-3	14
-13	4	2	-13	8	-4	-2	2
12	13	-12	13	5	-7	6	3
17	-17	33	-1	3	6	-16	9
-14	3	6	-8	8	-17	13	3
-6	8	1	3	0	-2	8	-2
9	4	-10	13	-17	4	-6	0
--	20	21	7	3	-1	3	7
12	-2	-7	9	3	2	1	14
--	-1	-10	12	20	--	2	11
24	0	6	-17	-4	6	-1	3
10	-8	7	6	6	-1	-6	28
-33	10	-20	1	-12	0	1	10
8	-6	-1	-3	8	-10	0	5
-2	10	16	8	-3	-5	4	-7
13	-17	15	3	-5	1	-5	27
-6	6	2	12	8	-4	-3	-1
12	-2	3	-15	1	4	-9	2
-16	0	2	-21	16	-4	4	-7
20	-15	17	8	-14	5	-11	15
-11	21	-13	13	-15	2	1	-13
5	-5	10	2	4	-9	3	-1
-4	2	-5	13	-4	1	-3	5
8	-21	16	2	2	-1	-16	15
-12	13	-7	-12	2	-8	11	-7
5	-8	-7	2	-4	16	-7	1
-15	3	-5	9	2	-8	5	-8
17	-15	3	-6	3	-3	-7	9
-23	14	1	11	4	-1	6	7
-14	-1	6	7	5	-8	-15	1
-9	10	-3	2	4	-1	-4	-10

18	-10	11	3	4	1	-14	14
-4	7	-10	15	-11	10	-4	10
-14	5	4	10	-12	15	-13	15
-15	20	-15	14	-11	8	-6	4
23	-7	20	2	8	7	-5	19
-16	9	-17	-8	1	-5	-6	5
-1	-8	-4	-6	6	10	2	6
-4	11	2	0	7	4	-4	9
20	15	22	5	8	11	-5	9
13	10	8	8	2	2	7	3
-10	6	2	1	9	5	10	1
22	16	0	7	7	7	1	6
19	-26	3	-5	25	5	5	18
-14	9	-6	8	-6	-2	3	2
-2	-8	7	-7	7	-3	4	3
0	-8	-8	1	2	-4	1	-2
14	20	6	10	7	3	32	8
7	2	10	2	12	16	15	9
-5	-2	2	-6	5	-7	1	9
-7	6	0	-1	-4	-2	3	-7
16	-14	11	4	1	-8	-4	23
13	17	1	-10	9	12	-4	12
1	7	5	-1	-6	-8	3	3
3	-6	0	-18	20	18	2	4
19	33	30	-10	2	15	-1	-3
-14	-4	-7	7	7	-1	9	-8
-3	-1	2	-5	4	2	5	0
0	0	3	2	-3	3	4	-3
20	-6	5	0	-10	17	-17	18
16	9	13	4	2	6	14	-14
9	28	25	12	7	4	-8	7
-6	6	10	2	-11	2	2	-1
14	-12	52	12	5	-3	4	-5
-13	8	-5	2	2	-4	-1	-2
3	-2	5	3	3	2	1	0
2	-5	-3	-4	-5	1	0	-2
6	-13	24	9	8	0	15	14
9	18	8	-11	15	3	-4	-2
4	9	12	-3	-13	14	-4	11
-4	2	-6	0	-6	-6	-1	-14
28	-10	12	3	3	9	-28	11
-11	6	4	-7	7	0	-9	8
-6	0	16	0	7	4	4	4
3	7	-7	4	-3	0	6	-10
14	-11	19	-2	1	-1	9	7
27	2	14	10	-4	15	-4	12
2	2	12	-6	0	-6	-4	-5
1	5	11	3	-9	5	-8	3
7	-18	16	13	3	-4	-10	9
-10	10	-22	-3	-12	-4	-16	3
3	0	8	-16	1	-11	-7	10
3	15	-1	0	8	-13	6	1
10	-20	10	-10	-1	8	0	6
-12	16	-10	9	-5	-1	-13	-4
16	13	12	-8	14	-2	13	18
-16	0	-5	2	-5	-5	3	-4
5	-14	-17	-7	-13	5	20	23
-1	-4	-6	1	5	13	4	-1
-2	-14	8	-7	2	3	-7	2
-1	2	7	4	-9	3	-5	-1
3	-19	-28	-24	-7	-9	3	19
19	2	5	7	8	-13	-17	-15
-11	3	13	4	2	3	-3	-1
-4	-4	0	2	-6	-5	2	6
18	-17	-20	-30	-3	-2	15	1
-11	-1	-4	6	11	11	-5	-4
0	-10	1	0	-7	3	2	8

1	5	-5	5	6	1	1	4
1	-6	-25	-30	-8	-1	-9	2
16	-17	-1	3	-9	-2	7	-6
12	-3	-4	6	0	-10	-8	10
-5	-6	-11	-3	0	-4	-3	1
-1	-1	-28	-34	-10	1	9	2
16	4	6	2	17	14	7	0
4	-4	4	4	1	0	5	1
1	8	1	-4	2	9	8	5
14	-11	31	1	24	7	7	9
5	6	1	13	3	1	1	4
8	2	3	6	4	5	7	6
5	2	3	3	0	0	2	5
8	-25	-18	-11	-4	1	3	8
15	-4	-5	6	2	8	4	3
5	-4	8	6	6	7	11	1
13	-15	-4	9	10	14	7	12
11	20	25	15	4	3	13	18
-5	-4	-1	9	2	5	7	2
5	16	-5	-4	-2	-7	9	3
-2	11	-7	0	-4	-17	6	-11
18	-11	-20	-5	3	15	11	9
12	-20	5	5	3	11	1	7
6	10	-3	3	3	3	7	14
-17	10	-11	9	6	2	12	1
8	-20	-17	-14	-13	9	0	3
-14	-27	-14	-3	3	4	-6	6
4	7	9	23	9	11	-4	3
2	9	-1	4	1	-6	11	8
14	-9	-37	2	13	7	11	6
9	-6	-11	18	2	6	4	12
3	1	-2	1	1	2	4	9
-3	-2	5	3	0	-6	8	-2
8	-29	-13	-1	8	-2	2	23
7	-10	-6	13	11	-5	0	13
-13	-10	-12	11	6	-10	6	4
3	4	-5	6	-2	-9	3	1
6	-18	-55	-10	11	-4	0	2
-3	1	-6	-9	2	3	6	1
-1	3	1	3	-7	-4	6	2
-2	3	-3	-1	0	-2	1	4
5	-14	-21	3	-16	8	-2	-4
27	-11	-20	15	0	3	1	1
-5	2	4	-5	-9	1	3	5
0	3	2	-4	-4	11	7	3
-1	-17	-17	-9	-18	8	13	12
13	-9	3	-3	-3	3	2	1
16	0	6	-9	9	12	11	5
-15	2	-4	1	7	-16	-12	-4
8	-18	-11	-6	-7	-8	7	13
6	1	-1	8	-4	21	15	14
-4	18	15	-3	9	0	7	4
-1	3	-2	9	7	0	2	-8
7	-10	-29	-18	12	3	9	12
4	11	-15	-1	-1	1	-2	8
10	-2	-1	-15	6	0	-6	12
10	-1	-3	-6	-4	-11	-6	9
14	-14	-21	-9	-2	-12	-7	-1
-10	-5	-8	5	6	0	-11	9
-3	11	3	-5	15	8	-4	-2
4	-22	12	-6	13	2	-7	6
11	-12	-29	-5	4	-25	-13	12
-7	-11	2	4	-5	2	8	5
-5	7	6	-5	-10	3	-4	1
-6	6	-1	-5	-4	-2	6	7
11	-15	-16	-5	-13	0	-23	26
-3	-6	-2	5	21	-2	-3	-6

-1	-5	1	6	-13	0	-3	2
1	9	3	-4	-4	5	-16	12
9	-9	-17	-1	-6	-3	6	12
-2	-18	-14	11	3	-6	-12	14
-5	-11	2	14	-8	5	-11	-4
5	2	6	16	-4	-7	13	8
5	13	28	3	0	-14	23	6
4	5	-17	-1	-3	1	0	0
4	5	18	0	10	14	2	4
2	5	3	4	0	2	0	2
4	15	16	13	-12	-3	2	2
10	7	3	9	4	11	14	23
16	9	1	4	-3	-12	-7	4
7	-15	-14	-10	-8	6	-6	-1
10	7	-10	5	-13	-3	-1	16
7	12	-12	-3	13	2	2	13
15	17	1	-13	-2	-5	1	3
3	1	-3	6	-16	-12	-7	7
-5	-11	-30	-12	-22	-6	4	1
-3	-6	6	12	0	7	6	16
0	-2	-2	-22	2	-9	8	-13
-8	6	-7	4	-6	-1	6	4
5	14	-27	1	2	-4	14	1
-7	-11	-4	-8	8	1	-6	0
11	-13	-7	-12	1	-5	7	10
-2	3	6	0	2	-8	-1	10
10	10	-13	-25	-4	-20	3	19
5	13	7	5	2	-8	2	4
-1	3	-9	-1	10	14	14	9
3	3	0	-6	4	-5	-1	1
15	9	-17	-18	-11	4	7	6
8	-12	-11	-1	3	2	16	7
-9	-3	-12	7	0	23	7	6
-9	-14	1	8	6	-2	-1	-2
9	-6	-26	-16	-11	-14	-6	9
-2	5	17	13	7	21	-19	18
23	6	-15	-2	2	-2	-8	-10
1	2	4	-2	-4	-3	-4	-5
6	0	-28	5	-32	-17	-10	2
3	11	9	-5	3	10	11	11
12	-3	2	-2	-6	4	-4	9
-4	-4	-9	-4	0	2	4	2
8	0	-34	-18	-7	-9	11	-4
15	10	1	11	15	-8	-13	6
2	9	12	-4	-1	0	12	19
5	6	-3	0	-12	-10	-5	3
6	10	-17	-9	-11	-12	-6	9
11	11	7	18	16	0	2	4
3	-6	-1	-12	1	0	-22	-5
-12	-2	6	0	5	17	6	5
-5	12	1	7	-2	-5	2	-1
-4	2	-3	-5	-2	-3	11	-29
-13	5	24	-73	4	12	-10	-14
1	5	-11	0	-7	-7	3	7
-3	10	-3	-1	-11	4	-2	-5
7	-8	2	9	-6	-8	7	6
17	21	47	-54	-10	-14	19	14
21	13	3	-4	2	1	2	-4
4	-12	-12	-16	-9	5	19	-4
-22	-7	-17	-22	0	3	8	-6
-4	23	-28	-55	-26	2	1	2
0	4	6	-13	10	0	-11	-7
0	0	0	0	0	0	0	0
0	0	0	0	0	0	-1	3
-1	35	-35	-67	-24	-24	2	-6
-2	2	3	1	0	2	1	-1
0	0	0	0	0	0	0	0

0	0	0	0	0	1	0	5
-4	41	-15	-73	6	18	8	17
-16	-1	-2	-1	0	1	0	0
-4	-4	6	4	2	-1	-10	-16
-10	-15	-2	21	-2	-6	7	14
-5	10	34	-55	11	12	2	13
28	2	0	-26		7	-7	21
1	2	22	15	5	10	6	14
15	2	-7	2	6	20	7	15
10	23	8	-80	29	-4	2	22
9	13	12	10	3	-1	7	4
0	0	0	0	0	0	0	0
0	0	0	-1	2	1	5	11
11	-21	27	60	39	17	36	6
-8	0	2	2	0	0	3	2
5	2	-17	9	2	1	6	3
12	8	-6	7	11	33	-80	-16
16	10	0	-46	5	19	10	0
12	3	-8	6	12	6	1	7
1	1	0	0	0	0	0	1
0	0	0	-1	0	1	0	2
-2	4	-3	-87	2	2	20	2
6	2	6	1	0	0	-1	2
0	1	0	0	-1	0	0	0
0	0	0	0	0	-1	1	0
7	1	41	-76	24	-7	-6	0
6	3	-2	0	1	-1	0	0
3	0	2	4	2	3	0	2
1	3	0	4	4	-1	4	2
-11	-32	-29	-64	-43	-9	11	2
7	-1	-4	0	2	2	2	2
-20	10	-3	3	12	13	-4	0
7	2	7	-8	2	-2	-20	20
3	-19	-18	-47	-6	-16	-42	-15
14	-17	8	-6	-10	12	-12	11
-2	-3	-1	-2	4	-1	-1	-3
-2	-6	2	3	6	-3	-9	-1
13	10	-9	-48	3	26	3	5
10	-21	21	-15	19	-22	-14	11
5	1	-19	18	-13	-29	18	-2
20	-10	10	2	11	-10	8	1
-17	-16	10	-41	-25	-14	-14	0
17	-19	12	7	-11	14	5	14
0	0	0	0	0	0	0	0
0	0	0	0	-1	3	5	-43
-12	6	19	-48	-38	8	-3	-8
-21	22	15	-10	9	20	8	-5
0	0	0	0	1	-1	0	1
0	0	0	0	0	0	-3	6
-14	22	-24	-71	-33	2	7	23
7	-8	2	-3	1	-4	-2	-8
0	1	2	-1	-2	0	0	0
0	-1	0	4	-1	26	-11	10
-32	-17	14	-58	-11	-14	15	-2
-8	2	10	12	13	-9	-14	-33
-17	15	7	-19	-15	-8	-22	-32
12	7	0	18	-15	0	16	-4
-2	37	11	-46	-8	2	-8	-10
9	14	5	-4	-17	7	3	4
0	0	0	0	0	0	0	0
0	0	0	0	0	0	0	-2
3	-5	23	-85	-17	-9	-2	-2
0	0	0	0	0	0	0	0
0	0	0	0	0	0	0	0
0	0	0	0	0	0	0	-2
3	-5	23	-85	-17	-9	-2	-2
0	0	0	0	0	0	0	0

0	1	0	0	-1	0	0	0
0	0	0	0	0	-1	1	0
7	1	41	-76	24	-7	-6	0
6	3	-2	0	1	-1	0	0
-3	0	2	4	2	3	0	2
1	3	0	4	4	-1	-4	-2
11	-32	-29	-64	-43	-9	-11	2
-7	-1	-4	0	-2	-2	2	-2
20	10	-3	3	13	13	-4	0
-7	2	7	-8	2	-2	20	20
1	19	18	-47	6	16	-42	-15
14	17	8	6	10	12	12	11
2	-3	-1	2	4	1	-1	3
2	-6	2	3	6	3	9	1
13	10	-9	68	3	26	3	5
10	-21	21	-15	19	-22	-14	11
5	1	-19	18	13	29	18	-2
20	-10	10	2	11	10	8	1
17	16	10	-41	25	-14	-14	0
17	19	-12	-7	11	14	5	14
0	0	0	0	0	0	0	0
0	0	0	0	1	3	5	-43
-12	6	19	-48	38	8	-3	-8
-21	22	15	-10	-9	20	8	-5
0	0	0	0	1	1	0	-1
0	0	0	0	0	0	-3	6
-14	22	-24	-71	33	-2	7	23
7	-8	2	-3	1	-4	-2	-8
0	1	2	-1	-2	0	0	0
0	-1	0	4	-1	26	-11	10
32	17	14	-58	-11	14	15	-2
8	2	10	12	13	-9	-14	33
-17	15	7	-19	15	8	-22	-32
12	7	0	18	-15	0	16	-4
-2	37	11	-46	-8	2	-8	-10
9	14	5	-4	-17	7	3	4
0	0	0	0	0	0	0	0
0	0	0	0	0	0	0	-2
3	5	23	-85	-17	9	-2	2
0	0	0	0	0	0	0	0
0	0	0	0	0	0	0	0
0	0	0	0	0	0	0	-2
3	-5	23	85	-17	-9	-2	-2
0	0	0	0	0	0	0	0
65	16	-2	2	3	4	7	0
1	3	1	3	5	0	5	1
2	0	3	1	0	0	-2	-1
0	6	0	2	1	0	1	1
37	5	8	-4	-1	-4	17	9
-7	6	-1	5	6	11	7	-4
4	-2	-3	1	3	11	-9	3
0	6	-4	-2	4	-5	-11	-12
24	15	2	-14	17	6	5	26
11	8	-7	-9	-8	-6	-5	3
10	9	10	-3	1	0	-9	4
9	4	0	3	0	4	3	-5
36	9	-8	-8	7	7	3	4
-16	-1	7	-2	-6	-5	12	6
-12	-11	-1	9	-9	-3	6	12
2	-6	5	2	5	0	-6	6
39	25	24	-5	10	3	-6	3
-8	13	-7	3	-10	2	2	-5
3	-2	-2	5	5	1	3	-2
1	-4	-4	-5	1	0	0	-2
27	16	0	-1	6	-14	-5	4
-2	7	0	-6	-5	-3	-1	2
-19	-1	-8	5	11	0	5	12
3	0	6	10	14	-14	-15	-13

23	12	2	16	4	1	16	3
-8	7	-8	2	6	8	-7	-8
0	-3	8	2	7	13	-6	13
6	-4	-16	13	11	14	5	-7
28	16	1	7	3	6	0	9
3	7	3	0	20	12	9	8
23	8	-13	8	4	2	3	9
13	5	2	5	14	12	1	5
17	19	5	19	5	7	5	10
10	19	0	14	5	2	4	1
2	-4	-5	2	1	2	6	2
4	4	3	5	2	2	2	2
21	26	11	1	17	10	14	14
1	6	-1	-6	-13	0	12	1
5	-2	-4	6	14	12	2	4
-8	8	-7	15	12	30	0	4
26	11	3	3	1	5	3	2
10	2	-4	15	28	10	17	10
1	8	7	2	6	1	1	15
5	4	9	7	5	0	4	-4
32	18	2	1	4	7	2	15
2	-9	-11	12	11	7	2	13
5	0	-10	9	3	16	5	3
23	9	2	2	5	1	11	2
24	35	2	20	1	4	14	5
9	-10	-7	8	5	0	7	7
1	11	3	5	0	2	3	2
1	0	0	4	-8	-2	-4	0
35	9	2	-1	19	1	2	3
8	-1	-13	8	2	1	5	2
1	-8	-2	13	1	11	10	0
-3	0	2	7	12	1	12	3
27	20	-12	-12	4	7	13	1
-9	-1	13	2	5	-11	-9	7
1	9	8	1	0	-9	7	-6
2	4	7	-2	-2	3	-9	1
37	8	-5	-20	-21	0	-8	10
19	3	7	-9	-8	-3	2	10
5	0	-4	6	1	2	7	0
1	6	4	0	6	5	2	8
27	8	-3	1	1	5	0	6
2	15	-1	17	-17		5	10
-6	5	6	-6	18	-7	0	5
13	0	10	7	6	-5	-4	2
29	14	-4	-20	1	3	1	5
12	2	3	10	-18	4	14	4
-1	-4	15	9	2	2	3	5
9	2	14	2	4	3	7	4
23	23	-11	-23	4	27	-1	4
0	7	9	-5	-11	2	7	3
-5	-2	-7	2	13	-7	-6	-3
3	2	-4	3	-8	-1	-2	5
26	16	8	-6	-1	-9	-1	-2
4	-8	0	-2	9	-12	0	-1
-9	-17	-5	30	-16	-15	0	-13
-11	10	-3	-7	0	-1	-2	-11
32	12	-5	-4	19	10	4	-10
5	-12	9	-6	-6	-12	-8	-4
1	4	0	3	0	8	-4	-3
-4	-7	8	10	5	6	4	-1
42	46	-14	-3	-6	-2	-2	6
-1	-5	-3	-3	-1	1	1	3
4	1	2	-1	1	3	6	-2
-1	6	4	-2	-1	-2	2	2
33	9	4	-13	3	-11	22	-8
-2	12	0	4	5	-16	-1	4
-6	7	1	-9	5	7	-5	0

1	5	3	10	-1	-2	-2	3
30	9	-3	6	1	6	5	7
14	11	1	7	2	0	-1	2
7	8	-13	-6	-2	-10	-6	1
7	10	5	6	-5	-2	-16	-1
28	9	10	11	-10	3	8	15
9	4	-7	-4	5	0	8	9
2	7	23	-15	-4	4	16	4
1	8	8	0	5	14	15	3
26	17	5	5	8	1	18	20
2	7	7	4	5	8	16	4
0	0	2	7	5	13	3	-2
1	12	5	3	2	2	-1	0
37	11	23	7	-1	6	13	15
9	4	5	7	3	3	8	5
3	2	-1	5	7	8	13	2
1	1	3	0	2	1	2	0
13	21	20	7	10	21	-5	6
-6	5	-1	-9	0	10	-4	8
2	10	-2	-2	-10	0	-2	-6
5	0	-11	3	9	3	1	-3
30	6	8	-15	1	16	6	4
5	4	3	8	9	8	-6	1
2	8	4	2	5	-2	-21	11
10	3	-11	16	10	24	-6	14
36	15	-9	-3	12	-20	-7	0
-4	-18	-9	8	-7	9	-1	-3
7	2	-8	-5	2	6	-1	2
1	7	-3	1	-4	3	1	-8
14	16	1	21	10	9	9	7
-1	-1	9	4	5	-4	3	5
19	3	5	1	-2	4	-5	-6
11	10	-2	-8	-5	2	-7	-8
29	28	18	-3	0	-2	12	-6
10	-2	-4	-11	-12	-13	-4	-6
4	0	-8	-1	4	6	11	12
10	10	-6	-3	2	1	7	1
8	3	-8	22	36	3	-1	-8
6	9	14	-13	-1	8	2	1
-8	-2	3	0	2	1	5	-1
8	-1	-2	0	2	2	1	-1
6	0	0	0	13	4	-16	7
15	-6	21	14	10	9	-6	-10
5	21	2	4	4	12	11	12
6	-4	10	-6	18	-7	4	1
3	1	1	10	15	-1	-7	4
3	16	22	0	2	10	-2	3
5	13	16	-8	4	5	-11	0
22	10	-4	0	5	-17	1	2
8	12	-9	-4	40	14	0	-21
15	1	-12	-10	6	12	2	-10
6	8	-10	-12	1	-11	-11	0
1	2	0	13	3	6	4	8
3	10	-4	5	3	-3	-9	0
8	2	-23	-22	8	17	-3	-17
-8	14	1	-4	3	-8	5	0
-3	-1	-4	-2	-10	1	-2	0
-1	0	-7	5	12	4	0	-2
2	-7	-15	-16	21	12	-4	-7
-7	7	-15	-11	-9	-7	-8	-5
-6	0	-3	8	22	-8	-9	-7
19	7	-9	4	22	26	-6	2
13	8	-20	-14	11	-4	-4	8
2	-1	-7	0	-17	5	3	-3
5	-6	4	3	-7	-5	14	-3
6	-2	8	2	5	-2	-2	-4
3	-10	-30	-45	-3	-3	-4	-12

3	3	9	1	6	4	4	5
5	0	-2	-1	0	1	1	6
14	-3	-10	-16	0	10	-40	2
12	9	-19	2	-4	15	3	4
-4	3	-1	7	5	4	6	0
0	1	2	9	-1	4	0	2
16	7	7	2	2	8	1	9
21	5	26	10	2	7	0	9
16	3	5	8	6	5	4	10
6	4	3	5	2	2	1	4
14	9	3	1	11	3	5	1
13	3	18	16	6	1	0	9
2	1	4	8	9	19	0	12
2	8	1	2	13	6	11	2
5	2	4	16	15	19	0	4
7	11	10	10	18	16	12	11
4	9	4	7	17	4	1	1
1	8	5	3	6	2	5	11
12	2	9	0	14	10	2	6
2	1	28	-12	1	12	2	1
-3	0	7	-4	5	16	8	7
3	-4	3	1	4	12	5	17
7	4	6	11	14	1	6	4
5	5	24	6	9	23	13	15
9	7	10	15	8	1	1	5
6	12	0	2	2	4	10	9
5	1	3	11	12	6	8	3
5	-21	-20	-7	2	12	-3	9
-7	17	-9	-8	3	14	18	13
9	8	8	2	8	4	2	5
3	1	5	1	15	1	2	1
-8	1	19	1	13	-6	0	13
5	2	3	6	5	0	15	2
5	-9	-6	-5	7	-2	-13	0
8	2	-12	5	22	-13	-14	8
5	11	-22	-2	-4	-2	5	11
-6	5	3	1	5	1	6	3
4	-5	8	4	4	8	3	1
9	13	-4	5	18	9	2	11
15	-1	-19	-13	14	2	-10	0
1	1	3	-18	6	2	20	-8
-8	7	9	16	-13	9	2	3
11	-13	-9	11	13	10	18	3
10	2	21	5	15	6	21	11
14	3	-12	0	1	9	4	2
-3	3	-8	-9	2	5	2	8
3	3	4	11	13	0	-8	1
13	10	-26	6	12	2	5	3
-2	12	8	1	17	7	5	19
7	10	2	-3	0	-3	0	5
0	5	-3	3	5	-9	-5	-15
17	-5	-31	-5	13	0	5	13
6	-1	7	-14	9	-8	-2	-14
-4	-16	-6	-4	-6	6	6	-10
3	13	7	1	4	-3	-2	-1
4	-1	-32	-8	-4	-1	3	0
7	-10	-10	10	-1	4	2	6
-9	-16	3	4	-23	13	-4	-3
11	4	-9	-4	11	4	-12	-12
6	-12	-28	1	14	-3	-2	18
7	-12	-3	15	-7	-5	2	-3
4	-6	-2	4	-3	-5	-13	2
7	8	0	-7	7	13	-7	-8
36	8	-22	-10	23	3	-10	-3
11	-3	-7	1	3	3	-7	-1
2	-4	2	3	3	5	-1	4
1	-1	1	13	-1	-6	-9	-6

```
17  -18  -37   -5   -1   -1   -4   -6
-6    1    2  -15   -9   17   -3    0
 4    0   -5    0    4    0   -5    1

14    0    0    5    2   -7   17   -6
-9   -6  -16    7   23   -5  -13  -14
-15   8   10   11  -13  -11   -5  -33
 1   -2    8    6  -13    0    5   -9

 7   11   -8   -2   11    9  -14   25
 3    7  -33   -1    8   14  -19   -6
 3    3   -1    2   -1   -3  -10   -2
 1   -3    1    2    2    4    4   -3

 8   -2   -2    4   13    9   -2   -4
-3  -15  -37   19   25    9    2   -9
-2   -5   -4   -2    2    4    0    2
 3    3    5    3   -3   -2   -3   -4

13   10  -15   -1    6    4   -4  -18
 1   25  -17  -23   13   15   -8   -8
 4    7    3   -5    9    6    6   -7
-5    0    0    8   -1   -6   -2   -2

 3    1   -5    9   15   27  -31   -9
23   -1   -9   -2    8    1   -7   -1
-8   -2   -4   -4   -1   -2    5    3
 0    0    1   -1    7   -7   -3   -3

 7   -8   -6    3    3    8   -2  -11
14   36  -30    1   10    6   -6  -12
-2   -6   -3   -4    0   -5    4    9
-5   -5   12   -8   -3    4   -8    1

 9   -2    0   33   -3   12   -4   -7
-1   -4  -25    2   -6   11  -11   -9
-4   -2    6   -2   -3   -1   15   -6
 3   -6   -4   10    0    1    8    5

-21  -22  -19   -9   -7   -5  -15  -12
 9   -8   14  -19   -4   -7   -8    5
 7   -2   -3    1   -4    4   11    6
 6    2   -5   -3   -2    2   -3    0

-13  -32  -24    3   -8    3    1    4
14  -10    0  -15    6    4    6   -1
-1    7    4    6  -17   -3    4    1
-1   -6    0    1    3    3   -4   -7

-11  -32   -8    7   13  -12  -22   -5
12   -4    2  -16    4    0    1    0
 6    0   -8   -5    6    2    0    5
-6   -3    6    5    5    5   -4   13

-33  -44   -4    6    0    2   10   -9
 4    3    0    7    7   -1    1    5
-3    1    6    1    0   -1    3    2
 0   -4    1    0   -1    0   -1   -2

 18   30   -8  -24    0    5   14   -2
  0    7   12    1    4    6    7   -9
  7    5   -5  -11   -8    1    2   -1
 -9    2   -1    7    5    7    6    6

-20  -22   -9  -13   -3   20   -8   10
 -4    6   -7    2    8   10   -1    0
  3    2  -19    6    4    2    3    3
  2    7   -6   -1    1    1   -2    6

 -8   27    3   -1  -11   -1    4   24
  1   -1    8   -8  -11    5   -3   15
 -1  -15   13   -1    1   -1    5   -5
  3    2    0   -9    3    4    6   -7

-16  -33   -8   -1  -23   10   13    6
 -3   -1    0   -9   -7    5  -12   -5
  3   -2    6    3   -3   -2   -3    2
 -6    9   -2   -3    5    0   -4   -3

-17  -22   -3   11    1    3   -5   -1
  2   17   -2  -15   -9   10   14    6
-12  -16   -1   20    6   -7  -12   -3
 10    1   -1  -10   -3    7   10   -1

-13  -28   -3    1   -1   -1    3    0
  5    3   10    1   -3  -10    2    7
 19    4   -1   -1    5   10    1   -8
-15   11   -3   -4    4   -5    3  -13

-13  -22  -20   42  -13    5  -11    7
  1    1    1   -1    3    6  -11    6
  3    3    0   -2    4   -4   -1   -3
  2   -5    0    0   -1   -9    4    4

-15  -26   -6   -2   -2   -4    8   16
  8   21   -3    1    7  -10  -12   -8
 12   -5    3   -9   -3   -2    1   18
-15  -12    5   -4    0   -3    7   12

-16  -26    6    5   -3   14    6   15
 -7    1   16  -13    5  -15   -2   11
 -7    9   -2   -4    0    0    7   -2
 -6   -8    2   -5   -3    7   12    2

-17  -31  -30   -8   14    4   -6    6
-11    6    3    0    0   -4   -4    0
 -4    0    4    1    4    3   -5    0
  2    3    0    2    1    2    5    3

-10  -61   10    4    7    4   -3    0
  1    0   -3    0    1    0   -2    0
  1   -1   -2    2   -3    4    1    1
  1   -1   -4   -2    4   -4    0    0

-13  -28   -4   -8   -3    3    1    2
 14   11    9    3   13    1    5    3
 -2   -3  -12   -2   -9  -14  -15  -11
 -5  -12  -12   -4   -3    3   -5    0

  0  -41  -24   12    4   13   16    5
 -4   -5    0    0   -4   13   -9    1
 -6    9    6   -1    5   -2    9    2
 -9    6    8   -8   -3   -2   -4   -6

-19  -26  -15   -2  -14    4    0    6
 20   26    9    8    3    9   -5   -4
  1   -8   -1    0    9    5    4    3
  7    4    3    1   -2   -2    0  -10

-18  -29   -4    9   -5    1  -12  -14
-10    5    4   -5    0   -5   -1   -1
 -5    4  -16    7    2  -11  -15    7
 -4    2   -4    6    7   -6    7   -3

-16  -27  -14    9   -8    3    0    9
 -4    7   -7   -3  -10    0    2   -1
 -2    1  -10   15    7   14   17    6
 -4    3  -10    3   -8    8   11    3

-20  -21   -8   -8    5    4   -2   -3
 -5    0  -10   14   -4   11    0   13
-11    5  -18   19    3   18   -3   -5
 -8   -4  -10   11    3   10   -9    4

-15  -35  -12   13    0    4   -4   -2
 -3  -12  -24   -8    1   -7    8    7
  0   -3   -1   -2   -2    3   -6   -2
  1    8    1    0   -1   -6   -6    2

-14  -19  -10   13   -1    9    3    1
  5  -12    7  -16    9   13   -4    4
 -5    6    9    4   17   -3   12   -4
 -6  -11   -6   -5    2   13   -9    7

 -8  -34    1   -4   -1    2    6    3
-11  -20   -1    8    2    4    4   -9
 -5   -4   10   16   14   -4    1  -13
  0   -6  -10    2   -3    0    7   -3

-10  -36   -3   -8   -2    2   -4   14
 -7   -1   10   -4   -3   -1  -11   15
  2    0   -1    3    0    4   -1    8
 18    0   -5  -11   -5   15  -12   19

-13  -22  -20   14   25   15   10   16
 -2    8   -5  -10   -8   -1    8   11
 -2   -1    1   -4   -1    2    0   -7
  0    0    0   -3   -1    2    2    0
```

-22	-31	6	7	5	-2	14	-20
7	-6	14	0	-7	3	-6	3
1	-2	-5	-3	-10	1	-24	1
-2	6	-7	3	-7	1	7	8

-20	-25	-9	-3	6	10	7	12
4	5	6	-3	-5	-1	-8	-6
5	3	5	6	10	-10	-15	-4
-2	-15	2	-9	1	18	12	8

-19	-24	-4	-2	11	-7	9	6
2	16	18	-7	-7	6	6	6
-9	-2	12	3	3	-2	6	-1
8	7	8	0	8	-11	2	4

-20	-26	-12	-12	-3	-2	-5	1
-2	-1	3	0	9	7	2	-2
22	9	4	13	-1	-4	-14	-2
15	5	-5	-8	-11	-7	-6	-14

-18	-21	-4	-1	3	0	-2	7
8	10	-1	-8	1	15	3	-9
3	1	-2	-5	4	2	-1	0
2	10	-8	-19	30	8	8	-7

-6	-25	4	26	4	-8	21	-2
-4	5	5	-16	4	13	-1	-10
-2	-6	-10	2	1	-13	-3	3
-8	-6	11	2	-7	1	5	0

-1	0	19	-2	-48	-12	11	-6
-2	8	-2	-4	5	-7	2	-3
-1	-2	-7	-1	-3	0	-4	-3
4	-4	3	1	-1	-3	-5	-2

-8	-11	18	-28	-24	16	19	-8
8	4	9	-12	-2	-4	-7	4
2	6	3	3	0	-4	-6	1
-2	-4	6	2	-3	0	-16	1

-5	-9	7	-26	-37	-3	-2	-16
-7	2	-13	4	-4	0	-5	-6
-4	-6	3	0	-3	4	-4	-4
-3	4	-4	9	2	-2	-4	7

9	2	7	-18	-24	29	7	-1
10	14	-3	3	-5	-2	-10	6
3	-6	0	-8	1	5	3	4
2	-12	1	6	4	3	-3	1

2	-20	20	8	-24	-9	18	-4
11	3	-11	-1	9	6	-3	-1
-1	1	3	-15	9	15	2	3
2	-13	8	-8	-1	1	-8	1

5	-12	6	-11	-26	19	-6	-17
14	4	-8	6	5	9	5	-6
1	2	1	20	-10	-11	20	-18
0	7	4	-3	0	2	4	10

1	-15	13	-2	-21	-8	4	-22
3	4	-7	3	4	-31	-14	-10
8	0	5	4	11	8	-8	2
7	6	-2	0	8	6	7	8

10	13	12	-9	-16	19	-2	-3
2	9	-29	11	9	-1	-3	4
-10	1	16	-10	7	1	-6	-7
1	-4	3	-5	0	6	1	3

-1	-17	19	-5	-9	12	-5	-21
12	2	-7	-7	8	-3	-2	7
-9	6	1	-9	1	-4	3	1
2	-14	0	-8	1	10	-6	-12

-5	-13	15	8	-20	0	20	-2
-8	8	-19	8	10	12	-11	2
12	0	-11	1	-11	0	5	-15
2	-11	-4	4	5	-11	-5	-4

-11	3	8	-7	-17	0	15	-26
-7	19	-9	10	-5	-5	-25	14
-8	0	-9	2	9	-3	-6	1

-4	4	-9	3	6	-1	2	2

5	-12	9	5	-18	14	4	-19
16	2	-21	14	-9	-15	16	-1
-11	12	-5	-10	4	-7	-8	15
-1	-5	14	1	-7	13	-4	-1

-5	-10	8	-1	-23	7	14	-10
11	6	-16	10	16	-3	0	6
9	0	-2	6	1	-7	5	22
-8	3	3	0	-10	-2	0	3

-14	-2	16	2	-17	15	6	-17
4	19	-15	-10	15	-1	-14	11
5	-8	8	8	-8	-2	10	-11
-8	10	2	-14	4	13	-12	-2

3	-10	4	6	-23	19	1	-19
-9	4	3	-30	18	-6	2	0
-11	0	3	0	-2	7	5	8
-3	2	-9	6	-4	1	-6	7

5	9	21	-2	-33	20	7	-13
8	-10	-15	8	-4	-6	5	1
7	3	-9	-2	4	-1	1	-6
9	0	-5	-1	1	2	3	-3

-3	-9	15	3	-30	-3	-7	-7
6	-25	-6	2	19	1	-12	1
-8	1	9	-13	1	13	2	8
15	5	3	-2	0	-9	4	-4

-12	-6	25	-17	-13	22	9	-10
11	2	-16	-7	6	4	0	1
18	0	-5	-4	-2	4	-5	-1
-4	0	1	6	-1	6	0	7

0	-1	8	-10	-27	8	-2	0
16	29	-4	-2	-1	9	0	2
10	6	4	6	-7	2	-18	9
3	3	-10	3	10	17	-6	9

-12	-3	11	-6	-32	20	21	5
-4	3	2	-9	1	-10	-4	7
0	5	-1	0	-9	-8	4	-7
5	-10	2	0	4	-5	1	9

-1	-5	1	-5	-19	2	1	-13
12	6	-16	2	11	-17	13	10
-12	16	3	-11	0	-6	4	6
1	-3	2	8	-11	5	-14	3

5	-19	11	10	-23	2	16	-9
7	-2	-11	0	10	-7	-7	6
15	26	8	-4	-4	6	-9	7
1	-15	-4	8	2	4	16	-12

1	-11	-4	11	-31	1	-1	-13
5	8	-2	4	13	0	-17	7
-10	7	1	-6	-1	4	-9	2
9	-4	3	3	-5	-4	4	3

1	-3	-1	10	-15	0	4	-22
-11	40	-3	-4	9	-14	-1	11
-1	9	6	-6	-6	3	0	0
7	-12	0	-2	3	9	3	1

-1	-1	14	-1	-24	8	-8	-14
8	5	-12	5	8	-17	7	2
-8	10	4	0	-6	-6	8	-10
-12	4	-9	3	5	-12	-3	4

1	-5	8	-11	-24	9	2	0
14	2	-13	-12	6	1	0	7
-6	7	26	9	-14	11	10	8
9	1	11	0	6	-2	-10	2

1	-13	34	4	-17	19	0	-15
-2	3	-1	-7	-3	0	-1	-2
-1	1	8	-10	0	[illegible]	4	-8
9	-17	0	-2	6	0	-3	2

-4	-6	2	1	-14	2	0	-29
34	9	-5	-3	6	-14	-9	-10

-1	-5	3	0	0	3	-1	1
-1	-2	-3	-1	-4	-3	-3	3
6	-4	14	3	-8	14	31	-29
14	11	-5	-4	10	-6	-9	6
-11	-1	1	-7	4	7	-6	1
0	4	-7	10	-1	-5	4	2
-4	-4	14	-2	-32	6	-14	-6
-5	14	10	-11	-4	-18	-8	6
5	9	1	-4	5	-4	-9	-2
5	3	-10	2	-17	-6	17	3
9	-16	19	21	-20	4	14	-17
15	9	-17	-6	1	-1	-3	6
1	1	-3	8	6	-6	4	9
-9	9	1	-5	0	-1	2	-1
-5	-7	19	3	-20	1	14	-9
-7	21	-9	-18	-7	26	-7	-17
6	12	-9	0	14	-6	-9	9
4	-8	-7	15	-1	-9	1	9
30	-20	11	-6	-4	24	-6	0
8	-2	12	-4	-17	-8	5	0
1	-4	3	-1	5	-3	3	3
-2	7	-2	-3	0	4	-1	0
17	-35	1	6	-1	-9	3	-16
-13	-20	7	8	-7	-4	-20	-4
12	7	5	-5	-11	-5	-1	12
-9	15	16	-6	-9	-4	4	-13
36	-21	9	-19	-7	0	9	-8
-3	-4	0	3	-8	7	-2	-2
13	-11	5	-1	7	-3	3	2
-2	-1	1	-5	-2	-1	-3	-5
33	-12	1	-4	-9	-12	-13	0
2	-1	4	-8	6	-10	-7	-16
-4	-1	15	-10	0	-1	-8	-5
5	5	0	-3	-7	2	-7	1
32	-14	-7	5	3	-15	8	-5
5	14	13	9	18	3	7	-3
-10	4	10	-10	2	-1	-2	0
5	-11	-4	-3	2	2	4	7
34	-14	20	1	-12	-1	-3	0
-4	-7	18	7	-3	9	-7	14
-10	-9	-4	-7	12	-13	12	1
-6	5	-4	2	-15	0	3	1
23	21	-8	7	-13	3	0	-3
2	-6	6	-7	9	-12	-2	-6
-4	2	6	-1	5	9	15	-9
8	0	7	-8	-15	6	-5	3
32	27	-4	-1	4	-2	12	-10
8	3	-7	13	-15	0	-2	4
5	3	-4	7	-12	9	-2	-1
-4	-1	-4	0	-5	2	-6	6
29	-17	0	15	-4	-1	13	-10
1	12	-10	-8	4	-10	-2	7
-5	6	19	-13	1	6	2	-7
-2	-9	-4	12	-3	-8	4	2
27	38	-15	16	3	-6	-4	-7
-1	0	-2	6	-6	-3	-6	6
0	-3	0	2	6	-4	-1	1
4	0	3	-1	1	4	5	-2
60	-33	2	-4	0	1	-10	0
0	-14	4	-7	3	-1	5	-2
8	7	4	-1	3	1	-7	1
-4	1	7	5	4	0	-4	3
25	-20	-4	12	-4	16	2	2
-2	-14	29	-3	1	-1	1	3
-5	9	-8	2	1	-3	-2	-7
1	-7	4	0	-2	16	-1	-1
30	-10	3	17	-2	-5	-5	0

4	-22	5	5	-18	-3	10	-6
-7	-5	8	2	-7	7	-2	-11
-3	0	2	3	-4	11	-4	4
30	-11	4	11	-8	-3	-2	1
18	4	1	3	0	-1	-4	-8
10	-3	14	13	-5	5	1	1
2	-10	4	15	-1	9	-3	-5
32	-17	-18	18	-5	-3	10	6
-15	1	9	-5	-12	8	-6	-10
9	11	-8	-5	10	-7	-10	5
-4	-14	1	-3	-11	9	1	2
28	-13	-1	-11	-16	2	7	-2
0	-24	6	3	-1	3	-7	-8
2	-12	-20	2	4	10	-13	0
-2	-2	8	1	0	-14	1	4
23	-14	8	12	-26	8	-4	2
13	-14	15	-14	-9	3	-13	-1
-2	-10	6	-10	12	-16	0	8
-10	9	-4	-7	7	-4	8	-8
45	-20	-14	10	16	4	-9	8
-8	1	5	10	-2	-7	-5	2
0	3	4	-5	-2	-6	1	4
4	3	2	-4	-2	-2	1	5
26	-20	1	-4	4	7	1	-8
-13	-5	13	2	-3	-7	-6	6
0	22	11	5	-11	-4	-9	8
-2	2	-2	-4	-13	2	-8	-4
18	-28	3	17	-23	-8	-6	-16
-10	5	10	14	-1	5	4	-8
13	-2	-2	-3	4	3	-2	3
-4	-3	1	0	4	3	4	0
32	-12	-16	-6	12	18	0	-16
13	7	5	-4	-1	-8	4	-3
-2	6	-13	-1	-1	4	12	3
-10	-3	6	1	-11	8	4	-2
26	-18	5	2	-9	0	14	-17
1	5	-3	7	-3	-8	7	11
-12	-5	7	-8	-7	0	-12	2
13	-9	9	-11	-11	6	11	-5
22	-24	-9	-15	1	8	-12	-7
3	-9	15	11	-11	14	-15	12
7	-5	0	-2	3	-8	-1	3
11	2	14	-11	13	-6	-6	1
28	-20	-4	18	-5	-6	14	12
10	2	-6	-13	-6	-8	-1	-13
22	-26	-14	-3	0	6	-15	10
-9	-13	-7	6	-5	1	-1	-4
26	-19	-3	-8	-6	-14	-4	-9
15	-8	3	-8	-4	-12	-7	-2
3	-5	-3	13	-25	-4	-1	4
-12	5	-13	-1	2	5	6	0
43	-18	-8	14	-23	1	-2	-2
3	1	0	-7	8	0	-3	-1
1	-5	2	5	-2	0	-2	-2
-1	1	-7	-1	3	0	9	-3
30	-11	-14	10	1	3	-11	10
-7	1	14	-4	1	2	1	-9
-2	-11	5	-7	1	-11	14	3
-16	1	3	-8	7	-5	4	-4
24	-18	3	6	7	8	-7	-22
3	-7	4	-8	9	23	-1	3
6	3	-1	7	6	-7	1	4
1	-3	-1	-6	-7	2	3	3
38	-15	-1	-7	2	-11	-24	-17
8	24	-4	7	2	-5	-7	2
4	1	-9	0	0	5	1	-1
-5	-1	3	-6	7	0	-3	8

22	-14	-5	1	-12	9	-5	-9
5	-6	8	7	-4	-1	-3	-9
-16	-33	-1	-9	-11	12	-7	17
-1	-3	3	-7	-3	2	-4	16
20	-14	4	6	-4	-10	-4	-4
-7	1	6	2	-12	8	1	4
12	-1	3	10	-10	-14	18	-3
33	-2	-17	-5	-5	17	7	9
23	-12	0	13	-8	-11	12	-11
-9	-5	11	-16	4	6	-5	12
-13	5	-12	7	1	-3	12	2
-4	1	5	-1	11	4	-3	-12
2	15	7	14	2	1	12	1
23	10	6	4	-10	-20	26	4
13	-6	3	4	-11	2	-7	5
4	-10	1	9	-4	10	4	11
15	17	17	31	16	18	24	11
4	2	3	2	-3	-8	-3	7
-7	-5	-6	-2	-5	-4	-1	-4
-2	-4	-6	-5	-1	2	-2	4
8	16	14	15	7	3	9	21
15	8	6	21	12	8	-5	5
-3	7	2	10	8	-3	0	6
5	5	-3	6	4	2	-5	0
-4	5	12	6	13	6	17	24
17	-5	-6	-1	-10	-7	-18	-8
-2	3	7	2	-11	-15	-3	12
-2	-2	-7	-4	0	2	5	5
-6	10	11	8	20	12	-11	22
15	-3	15	-3	-2	-2	2	0
-8	5	-5	4	-4	-9	2	-1
-3	-1	3	1	-1	13	7	9
8	-5	11	5	-5	14	-9	14
35	2	15	8	-2	1	-2	2
-9	4	-14	-3	-2	-12	-4	-2
-8	-2	1	-3	3	-6	0	10
0	16	15	-6	4	-3	3	4
20	3	-4	5	9	10	-3	-9
-2	-10	11	-7	-10	-11	-1	17
-15	3	9	2	-10	-15	10	16
4	14	19	-7	0	3	8	19
34	16	6	-9	-1	-13	5	6
-2	1	3	4	1	2	-1	1
-7	0	-1	2	0	1	-1	6
6	1	13	9	10	9	16	15
18	10	17	13	-1	3	2	-7
11	-15	-4	-10	-6	-13	-13	-17
14	-6	-10	1	4	6	-1	-1
1	13	10	7	13	14	5	-7
28	5	14	14	2	-2	-3	3
-4	-13	-9	10	-4	19	4	-3
-5	-5	5	0	0	-5	-4	3
0	1	22	6	18	9	-3	18
10	5	-2	12	-3	1	-12	-8
10	9	1	-7	19	-1	2	0
11	-8	9	-10	11	6	3	0
11	10	44	19	14	0	-7	1
22	6	-1	2	2	9	-4	0
0	4	-6	-6	0	3	-2	0
-5	2	-2	1	1	0	1	1
7	5	32	0	26	30	4	5
-3	-7	-6	15	-10	3	6	7
-7	-8	-13	2	-1	-5	7	-3
-2	3	0	-8	4	6	0	5
8	9	4	-2	11	2	29	4
14	-5	-5	8	8	-14	9	0
-10	8	-15	5	-9	-6	-1	9
-16	18	-21	9	-13	-3	8	-2

7	25	23	-9	18	20	16	6
8	-9	-5	8	13	11	7	-8
10	4	-1	-2	-9	-7	-9	-7
1	-4	-5	1	8	-10	-5	4
2	9	14	16	14	-5	0	1
17	-21	9	-1	-3	12	4	-3
14	-4	3	10	-10	0	4	7
-11	4	4	2	-3	-1	-1	9
8	17	26	11	-3	15	-1	14
9	12	-8	10	-18	8	-3	-11
-7	-14	-3	7	-4	-3	7	1
2	-3	16	-3	0	10	6	9
8	9	8	3	14	18	1	11
6	10	-4	1	-2	-16	-2	14
8	1	14	12	-3	3	8	8
-15	12	-3	3	-2	3	10	14
-3	22	13	-11	11	-7	11	4
14	3	-6	0	-9	-2	2	4
0	-2	-27	-5	3	-10	5	-1
-24	8	-11	-3	2	-3	-1	11
2	19	36	8	-6	5	15	3
-4	-3	14	-5	1	-10	-10	-12
-4	-3	-2	3	-8	1	3	4
-3	5	4	0	-2	8	4	8
14	8	9	15	10	-4	11	5
10	9	9	8	15	-15	-8	6
-13	-10	-8	5	-13	-20	-11	-6
-3	-1	-4	-6	0	-1	15	13
-1	-2	12	9	2	2	3	13
33	-23	2	15	-1	-4	8	3
6	8	-7	6	6	8	-1	9
-8	3	-4	0	-8	1	-1	11
5	6	16	-6	-3	2	21	31
12	-9	-1	0	1	-4	3	-12
-18	-13	-11	2	[illegible]	-9	-6	-8
-3	11	0	-1	0	-1	5	13
-1	5	0	2	5	25	16	10
21	-5	12	14	2	13	5	-5
-3	5	-14	-2	-12	0	11	7
-7	-1	-1	19	-1	-1	-1	8
7	10	11	3	8	0	3	22
19	3	12	-4	9	15	15	5
1	2	-10	2	0	-10	-1	2
1	0	-1	-12	16	21	-7	9
-4	11	24	-5	11	-7	11	20
18	-15	-13	5	0	-15	9	-5
0	1	-9	-1	-8	4	-8	6
-2	1	20	-7	3	9	3	9
0	20	-6	-12	31	9	12	9
27	8	7	15	5	-16	-7	-3
-9	-1	-7	-2	4	-3	-3	-8
-6	3	-2	-2	-6	-3	2	-1
-6	6	8	48	19	-3	11	12
2	-7	0	3	1	-1	-4	8
-6	4	-4	0	-3	-4	6	3
-13	3	5	-8	-7	-3	5	8
-2	7	11	6	2	12	4	14
12	-5	9	2	2	4	-1	0
0	2	-9	-15	-2	-16	-17	8
-22	-5	-5	-19	-10	-1	-2	1
-9	11	12	3	6	6	17	1
19	-6	7	14	-1	-7	-9	-1
-11	9	0	-17	16	-6	1	0
-24	9	3	3	-3	-9	-2	3
0	9	8	1	7	1	-5	2
8	-3	7	-1	6	2	-6	-3
-2	5	-2	6	-3	-4	-3	0

-50	13	-2	1	4	2	3	4
0	7	21	26	2	-4	8	17
11	7	1	-7	-15	-1	-15	-1
-4	-11	-4	-17	-7	1	6	3
-9	3	3	2	10	6	12	6
-2	1	-1	2	-4	-10	-3	6
-2	-5	2	-8	2	2	0	8
1	1	0	6	13	11	4	3
-12	0	-5	11	20	19	5	2
3	5	-2	-13	-12	1	-7	11
7	12	0	10	0	7	4	-2
-9	-6	-12	-11	12	-23	-3	10
6	0	-1	19	18	24	12	9
-3	6	5	2	2	2	-5	-2
-11	-8	3	-4	-4	-8	-3	5
-4	-16	-12	3	3	-4	7	32
8	2	-18	32	12	-1	7	1
-8	0	0	-1	7	-8	-1	-8
4	-1	-1	-12	0	3	-18	1
8	8	-10	-14	19	-11	5	9
6	-7	-4	8	12	26	6	-1
5	3	7	-14	8	14	-13	20
-10	-16	17	-2	4	-7	-9	-8
-5	14	-4	3	7	-12	-10	14
20	-19	8	35	14	13	9	-2
-4	-2	1	-1	0	-3	1	-1
2	2	0	6	4	0	-2	5
3	3	-2	3	-3	-7	-1	-3
-2	6	22	29	34	13	14	0
-9	-3	1	3	-4	5	0	2
-4	-7	2	0	-3	-5	6	0
1	1	2	-1	4	2	7	8
-6	20	16	7	20	33	-1	5
1	-11	-3	-3	3	-11	-25	-9
-16	-1	-8	4	1	15	7	-2
23	8	18	2	16	-13	-7	3
3	6	-8	16	16	12	4	3
5	0	-5	5	-1	1	-3	2
1	-2	2	-13	10	2	7	6
18	18	9	7	9	8	14	21
12	7	14	15	12	15	5	11
5	1	-2	11	8	17	0	3
6	-1	-7	11	6	6	5	7
14	15	11	1	10	4	1	12
4	2	1	30	1	11	13	6
4	2	7	3	8	5	7	-11
9	5	6	-10	-10	8	10	-3
29	1	26	-4	-8	5	4	13
6	3	1	35	6	3	0	3
1	2	0	0	-3	-1	-5	-7
3	-9	-6	-1	4	3	0	4
1	5	-2	-2	-4	-1	8	-10
-6	0	-4	10	12	46	28	2
1	4	1	4	4	0	-2	-2
1	-2	-4	2	5	1	-3	0
1	1	0	-2	-2	1	-1	-1
-6	3	-11	35	53	13	-1	-3
-2	-5	-13	0	5	-16	-11	-12
-30	1	-18	3	-8	-24	-19	-5
3	1	7	-8	-8	-7	-19	15
10	4	24	30	1	6	10	-9
8	-4	-4	-7	12	-6	-9	-1
2	-4	3	-9	-2	2	2	4
9	22	-5	4	5	0	-9	-2
1	-3	-12	18	16	18	16	4
-8	-5	-5	-3	6	-3	-3	-7
5	-2	1	-3	2	2	-6	4

3	10	-3	12	0	20	-4	27
5	16	-3	18	4	23	11	12
1	0	1	0	1	-2	1	2
0	-1	2	-2	-4	-2	-2	1
-1	-2	-2	-5	0	0	2	-2
7	9	5	63	-1	12	0	1
-3	4	-5	-7	-5	-11	-10	-12
-12	-10	-12	-15	-14	-14	1	1
-10	10	6	16	9	2	9	11
8	9	-1	12	12	13	3	6
-3	7	4	-2	-8	6	-3	2
-5	-12	-8	-9	15	-10	-4	-2
9	8	-13	7	34	-18	7	-5
22	12	-11	16	25	13	-11	-15
-2	-3	-4	0	0	1	-13	-3
13	-7	-7	12	13	-10	6	19
15	16	-15	-12	34	-3	5	1
-9	1	21	11	17	8	-6	-5
-5	3	-4	0	4	0	4	-11
-3	-7	-8	-1	-2	3	1	2
5	11	14	6	2	-3	-7	-4
31	0	-2	15	11	-24	4	5
-4	-1	5	-9	-18	-8	-9	-4
-18	-20	-14	7	3	-16	-3	8
11	29	-13	-13	1	7	6	17
21	6	1	11	-8	14	5	2
8	-3	-6	-10	2	12	3	1
3	3	-6	3	-14	-8	-5	15
4	16	0	16	-1	7	16	0
1	2	4	22	13	19	1	-11
-3	2	20	10	-1	-4	5	-8
-9	-8	-2	-6	-7	-4	-10	8
8	0	1	-6	14	-8	5	13
-6	17	-1	26	-1	7	12	0
-7	-4	-2	-31	-1	-7	-5	5
-12	-5	-7	4	3	-6	-2	15
-2	5	-1	7	7	10	-1	8
20	14	9	14	16	16	24	8
0	-7	-6	-3	3	1	-6	-13
-4	-4	-9	-5	-10	-1	-8	-4
0	2	1	-1	24	24	31	21
2	5	12	11	4	7	6	3
-5	-3	-4	6	-1	-3	-1	2
1	-2	-8	0	2	-1	-4	0
22	6	-5	-1	12	8	-2	-1
27	28	-27	20	1	14	-3	2
-5	1	-2	-2	-2	6	1	9
-5	-2	4	3	5	11	8	2
-1	-3	-2	1	-5	-3	8	5
12	49	-3	8	20	9	17	12
0	-6	7	1	9	0	-4	-2
0	8	-10	-2	7	0	-1	21
1	0	-7	17	2	-5	16	4
17	-2	-20	14	14	15	15	4
3	0	9	-4	0	-4	4	6
-6	-6	-7	-5	-9	2	-2	-10
0	-5	-21	-3	14	9	13	-11
2	29	4	25	-1	22	-3	2
12	2	2	-11	9	16	7	-4
-10	1	11	-15	3	-4	4	-2
-5	4	1	-10	19	4	6	-15
-2	-4	-7	30	21	11	5	-12
-3	-2	4	-2	-5	-1	-7	-3
1	-5	-6	0	-6	1	0	7
-7	8	-2	-3	14	2	-3	2
-1	-26	22	26	1	32	6	-2
-38	1	-20	-1	-3	-2	-4	-6

2	2	0	7	5	3	10	3
1	6	-5	-3	5	7	-4	-5
3	8	-14	1	-9	-1	-4	-5
-26	-5	-19	-7	-5	-10	5	-11
-25	-11	-14	-8	-16	-9	-6	-8
14	-17	-1	-1	2	6	2	2
0	3	8	2	3	-8	-3	0
-49	17	-23	-3	11	-1	3	7
-4	4	0	0	4	-1	4	2
-4	-2	-2	2	-2	-1	0	2
-1	0	0	0	2	1	0	0
-34	4	-9	-6	21	1	3	-7
1	-2	18	-3	-16	2	-3	7
-	8	7	-5	4	2	-6	8
2	-7	-1	-5	1	4	-4	2
-29	5	-2	13	3	-14	18	1
4	-15	8	-8	8	-10	1	2
15	-8	-10	3	-4	-4	0	-2
-4	-3	-3	2	-3	-4	-6	12
-20	13	-18	3	4	-17	13	-14
11	28	-6	-8	6	16	10	0
4	3	13	-9	-7	5	-5	12
-7	0	1	5	3	3	1	2
-27	3	-11	-5	-11	-21	0	-12
-	-5	1	-22	5	3	-5	0
7	8	-5	1	2	-7	4	-5
3	1	-2	-8	4	0	6	-2
-45	31	-1	0	1	-12	-6	2
3	4	3	-1	0	3	3	5
12	-5	6	4	1	2	1	-2
2	3	2	5	2	2	-1	3
-45	9	5	6	-17	-1	18	-2
2	-3	1	0	-1	0	8	10
-2	-7	-8	-5	-1	6	4	0
-3	6	-1	12	0	-2	-7	5
-26	3	-12	-2	2	-12	16	-10
12	-3	5	4	8	11	-17	-16
-3	-2	2	-3	-9		1	13
11	10	5	3	2	-2	-7	2
-26	8	-7	32	22	-5	14	2
-8	-10	3	-7	7	3	-5	0
1	0	0	-3	4	8	-7	-5
-1	6	8	4	1	1	-4	7
-31	4	-14	2	0	2	8	1
1	-6	3	17	-6	13	-10	5
10	2	10	-2	7	-3	5	1
8	-8	-3	-14	7	-15	-6	-10
27	16	-4	13	-	23	6	9
5	7	2	4	-3	-1	18	23
0	7	4	-3	9	-3	-2	-6
8	-1	2	-6	-3	6	-2	2
35	-1	-8	-2	-1	11	-3	-7
11	2	6	7	-10	-6	6	9
5	-	-3	-6	16	9	-9	-16
12	20	5	3	1	-3	4	-9
24	2	12	1	5	-16	3	-4
1	-4	-11	-11	-14	-8	10	14
20	-8	-3	8	1	-11	-4	1
7	-4	15	-3	-6	2	7	-2
-21	9	-19	2	-5	-7	25	-8
17	3	-3	5	-12	9	2	8
3	-4	1	3	-9	11	-3	-4
3	4	6	-22	6	4	-5	11
-23	16	-17	13	-12	-21	9	5
7	-20	-6	6	2	0	6	-9
-13	-6	-1	-7	-3	5	-7	5
1	-10	8	0	11	-9	-8	0

-26	10	-7	-9	-4	-19	16	6
5	-7	4	-4	0	8	-1	4
-7	6	-8	1	10	-11	0	-14
6	-16	5	-3	14	-1	1	12
-27	8	-14	12	-1	-1	10	-19
21	-11	9	-14	-3	-8	-1	8
-13	12	-4	3	0	-2	0	-9
2	-7	12	-3	-3	1	1	3
-20	18	-14	-14	-3	-16	6	-24
2	-17	-11	-3	-3	2	10	12
1	10	7	10	5	8	4	5
7	-1	2	2	4	0	0	7
-30	0	-16	9	15	-18	-3	12
-4	4	-11	-5	-12	-4	0	-10
-2	2	-1	-4	0	2	-6	-1
-3	2	-5	4	3	7	7	5
-24	25	-6	-1	6	-9	-2	-13
15	3	11	-3	-8	4	2	-11
-9	0	7	-2	8	4	-8	5
6	5	-11	-1	-5	-15	11	0
-34	0	-11	-7	9	-7	19	-3
-8	4	-11	3	-3	11	12	-9
9	9	1	2	1	-7	0	-3
-2	-6	3	-1	-7	0	-5	-2
-34	6	-5	-4	-9	-3	9	2
9	-1	-3	-5	-12	-26	-6	8
11	-7	4	-8	1	4	0	-1
9	8	7	-4	1	-1	-1	-3
-30	3	6	5	3	-10	6	-7
3	3	-19	-26	1	-3	5	7
-5	-4	10	6	-10	13	-7	4
5	-4	9	-3	3	-6	5	9
-24	4	-19	9	-4	2	8	-5
2	-3	-15	0	9	-1	22	-4
9	6	7	5	-9	11	-3	0
5	4	10	-5	5	-8	-3	-7
-27	8	-3	7	2	-1	13	-9
12	7	-6	-4	5	-6	7	0
1	5	-3	15	0	-4	-2	-5
-5	7	1	-7	13	-2	13	-8
-22	17	-11	-15	16	-8	18	-14
-1	2	-7	14	-6	14	-7	-6
17	-8	4	6	-7	4	-9	-5
-6	-14	9	-1	1	-3	-5	6
-30	25	-12	2	18	-13	16	-18
-3	8	-8	10	-1	-3	3	-6
-7	-5	6	4	1	7	-11	1
6	-5	-4	2	-1	9	-2	-5
-22	7	-15	7	-3	-1	0	-1
12	-10	5	2	0	-4	6	4
5	-1	-1	-9	-7	-1	17	1
-17	9	8	-16	-14	4	14	11
-31	0	-13	7	-11	3	6	-7
-11	1	-7	8	-3	15	-11	16
-15	-1	-3	16	0	5	-2	-2
11	-6	6	5	-5	5	3	6
-24	13	-20	-2	7	-10	-1	-3
2	15	-5	6	-10	-7	1	-20
14	-4	-2	8	-13	3	1	-3
1	-4	2	-3	-7	8	-4	16
-2	1	-3	-2	-7	-4	3	0
7	6	2	3	-2	1	0	-1
4	-6	-4	2	-4	-3	9	5
0	5	-3	-3	-7	-4	-50	-31
-3	-1	2	7	2	-1	6	4
10	0	0	-2	-6	-20	9	-3
-22	-20	-1	-1	9	13	10	-12
-20	-13	3	12	6	5	-26	-7

4	0	-14	-2	6	-12	11	-13
3	-10	6	22	-2	16	1	-5
-11	-3	-7	0	-5	5	1	0
-6	-1	8	8	9	10	-27	-5
10	-5	7	-2	-9	9	-9	5
4	5	14	-15	3	1	5	-10
-2	0	3	7	6	-13	-6	9
-14	5	-1	-17	14	11	-26	-2
6	0	0	-3	6	-8	1	0
-8	4	-5	2	7	4	11	15
19	9	14	-2	-7	-8	3	-1
-3	-3	-2	-10	2	12	-29	-12
-5	-12	-3	0	6	-2	-3	3
-2	2	11	1	-7	2	1	5
-2	2	0	-14	-5	-1	8	3
-26	-28	-6	6	8	3	-27	-10
-3	-1	2	6	15	4	0	1
-2	2	13	-2	6	3	6	0
-4	-1	-5	-1	-1	8	-5	5
11	-15	-5	-8	-6	14	-29	-14
-6	-5	1	0	6	0	2	-3
-1	-5	-3	5	-10	2	4	3
0	3	-3	13	4	-1	-6	-4
9	2	2	8	28	-3	-31	-11
-4	1	-9	-10	-3	-4	-6	-15
5	1	-6	-3	-6	5	27	-22
5	-13	-7	3	20	-4	-12	-7
-24	-1	-13	-4	-11	-8	-21	-15
-4	-6	-6	19	11	2	1	-5
-10	-3	-9	9	-10	12	1	2
1	-9	7	15	5	-5	-35	-29
30	4	9	9	17	19	-17	2
3	-3	1	-3	5	2	5	-1
-3	-2	-3	1	3	-8	-2	-4
-1	-4	0	12	-8	2	-4	-6
-1	16	-2	-14	-6	25	-36	-15
-1	0	-4	3	-1	-4	-4	7
0	8	9	10	1	-4	-1	10
13	3	-4	5	-4	-1	11	8
-7	14	16	5	13	12	-28	-1
2	1	3	2	10	-8	9	4
3	12	0	5	-3	8	2	-6
-11	16	0	11	6	1	18	1
16	-10	-4	1	-14	5	-20	-15
12	1	4	5	8	-7	-17	-1
9	2	11	14	-9	6	-4	5
2	3	18	7	5	-5	-1	6
2	11	3	10	3	8	32	2
5	12	-5	20	-11	-6	-6	-6
4	13	19	-6	2	-8	-9	3
-4	-4	9	-1	21	-1	7	-1
10	15	3	-1	3	9	24	2
3	0	-6	2	-1	4	2	-9
3	1	1	6	-6	5	-8	-5
2	0	9	-6	3	-4	13	2
7	1	13	23	-3	4	33	-15
2	7	11	15	14	-10	-11	0
1	3	-4	12	9	-4	-13	11
3	-13	1	14	6	3	8	-5
5	0	10	5	5	4	-30	-6
4	-6	-5	0	1	4	-1	-1
6	3	-2	5	0	-5	5	-2
7	-4	-2	-4	7	4	-1	-7
-7	1	-19	3	12	37	-40	10
2	7	-12	7	11	17	2	-7
3	2	1	1	6	5	5	-2
-9	9	4	6	12	9	-5	11

-1	2	9	0	-7	5	-24	-2
6	-7	3	1	0	1	0	6
-12	4	-2	-2	-9	1	-2	10
-1	11	-12	21	-5	15	-5	10
-5	5	-6	14	-7	5	-29	-3
0	-2	-2	-5	1	-3	0	-3
2	4	0	3	-2	2	-2	7
-5	3	-1	2	-4	6	-3	0
-11	8	-8	19	-34	22	-35	13
-3	-1	9	-1	-3	11	-1	-3
18	7	-5	11	-12	2	18	-11
-5	9	-6	1	12	-9	-3	1
-9	-3	9	-14	8	9	-26	-6
5	0	-1	-5	-2	-1	6	4
2	8	-2	-1	1	5	-4	-5
1	1	1	18	-10	7	-2	3
-1	12	9	-15	-14	17	-38	13
0	3	-1	-8	8	0	-3	-9
16	-8	16	3	-9	-5	-1	0
-1	-7	13	-4	0	7	2	1
-16	-1	-2	0	8	1	-28	-8
9	7	-3	-5	2	-2	3	0
-6	11	-2	-4	-5	-2	-18	28
2	-6	-10	15	-10	-15	0	-2
-2	-2	-3	4	11	7	-30	5
0	9	-1	-7	-7	4	2	2
-2	9	3	2	-6	-8	3	-6
4	-10	5	10	-4	21	-18	14
3	1	-2	-10	14	6	-26	-8
-1	-14	3	2	7	-3	-22	1
-1	-1	1	0	-14	12	-5	3
10	0	1	-3	12	-5	10	-3
-22	-8	-13	-11	-10	-7	-25	-13
-5	-2	-4	-4	-18	-9	-3	9
17	-5	5	13	11	6	8	3
4	20	9	2	5	8	1	6
-7	7	-2	-6	0	-7	-23	-17
-5	-5	0	2	2	6	2	-2
4	3	0	4	2	-5	6	-4
10	8	1	-1	5	-5	-2	14
8	-11	25	6	-1	7	-43	0
0	-4	-2	4	0	7	17	3
2	5	1	-5	3	21	-10	-2
-9	-16	-12	7	-8	9	5	2
-10	-5	-11	-2	1	-5	-30	-9
3	-2	-4	1	0	-1	1	8
4	12	-1	-1	-17	3	9	13
7	0	-5	-6	1	9	4	5
-18	-10	14	0	-4	11	-28	-16
0	-1	-1	2	1	4	1	-1
-2	-1	-2	-1	0	3	-1	0
1	-1	-2	2	3	3	4	-2
-1	-2	1	-6	-1	-1	-70	6
3	7	-1	-11	-4	12	4	-14
-4	4	-2	4	-12	2	15	-4
-4	-17	6	-3	-5	8	-22	22
-11	5	-4	15	-1	4	-1	-21
-2	10	11	-13	14	4	9	4
8	8	15	19	15	14	10	5
15	8	4	-5	-8	14	1	1
1	2	-3	-1	8	21	13	-29
0	-6	6	-6	2	-1	-4	8
4	-5	-5	-4	-2	0	0	-4
-2	9	-2	1	-15	24	-10	21
1	4	5	-8	-10	22	15	-13
-5	11	0	1	3	6	-2	7
-3	-2	-1	-5	-6	-2	1	1

-5	-8	13	-13	-3	-2	-9	-1
4	-28	-11	2	-20	18	9	-24
4	7	6	-3	-6	6	-5	-7
-4	-7	0	-4	-5	-7	-5	-6
-13	2	2	-12	5	0	15	18
-7	-13	-20	13	-10	16	6	-19
-8	5	5	-1	2	10	-10	-1
23	-11	-5	8	4	-8	-4	-5
5	-5	-8	-11	1	5	-9	7
-6	-9	14	12	-12	17	3	-22
-8	-5	3	-3	-1	12	-4	0
1	-5	6	1	5	1	7	-5
7	-2	6	1	2	6	-5	0
-4	17	-24	-5	-20	13	14	-27
2	-1	1	-3	1	-3	0	-3
3	-2	1	-2	-1	2	-1	-2
5	-2	-2	5	-7	0	-6	1
8	8	-5	11	-43	24	2	-13
4	-2	-3	7	4	-4	-4	13
0	0	9	-2	-3	0	1	-6
1	-7	10	-1	5	0	-24	-1
-15	25	2	7	-10	22	0	-21
2	-5	-2	6	3	13	-12	5
16	-11	10	6	0	5	6	-3
5	5	10	-5	10	12	-7	11
-14	8	-15	2	-14	13	-3	-8
6	5	-5	-7	2	5	5	9
1	0	2	-4	0	8	5	3
3	-12	-6	-3	-1	2	14	-5
20	11	-25	-21	-1	24	6	-10
5	5	9	2	-4	4	-6	-1
-6	11	0	5	-3	2	-1	6
18	-17	-13	-4	-1	9	-7	9
-8	-4	-3	2	-31	12	5	-18
-11	-7	-8	6	-3	4	0	-12
-6	-1	0	-3	9	5	2	7
-8	1	8	-6	-5	2	-1	7
10	16	12	16	-1	18	-12	-25
-2	3	2	1	-18	-2	15	-8
9	10	-7	2	11	11	-1	-2
1	1	-6	9	-14	3	-1	-2
13	2	-9	7	-5	19	2	17
1	7	7	-8	13	17	5	-10
1	7	4	-6	-4	9	3	0
7	8	9	14	7	4	0	9
5	6	2	12	2	25	1	19
3	7	3	6	6	1	0	-7
	19	5	4	-4	17	1	4
3	0	19	7	1	24	8	21
9	10	1	8	-2	23	2	-18
3	3	5	0	-2	8	2	-9
6	9	8	19	6	2	-2	-9
3	-4	7	-5	-8	-7	4	5
-6	26	18	7	0	24	4	13
13	0	1	11	-9	3	4	5
3	7	2	0	4	-1	2	-5
2	9	15	11	-21	1	-1	1
4	0	-4	-14	-16	24	1	-13
-9	1	0	-8	-4	0	-1	11
16	14	17	0	-9	-2	0	-12
14	-1	-14	-9	-2	0	4	19
4	6	-11	4	-17	8	-5	-19
1	3	12	2	-18	-4	-4	-1
14	7	2	3	-7	0	12	-8
-9	5	12	14	-2	-9	-4	4
18	4	25	1	2	22	5	-23
0	-2	0	0	3	1	-1	5

-2	5	2	-2	0	-3	2	1
-1	0	-1	2	-6	-9	-4	-7
4	-2	-5	-7	-3	64	4	-25
-2	12	0	-3	-9	8	-7	13
-3	6	12	-12	-9	15	2	-4
-4	9	3	-12	1	14	-15	7
0	15	-12	-6	-3	0	6	-20
-1	2	5	-4	6	9	2	-7
-7	-2	0	-2	-18	-1	6	-4
-5	-15	5	11	-1	-10	7	2
-19	12	8	-7	-4	21	4	-15
2	4	5	5	1	-5	2	3
13	-8	-5	0	-14	-2	6	-11
17	2	-13	8	-2	26	-15	5
-14	-4	-9	12	-21	13	-4	-23
-3	2	-3	-2	-2	3	9	6
13	-9	2	4	-3	12	1	-3
-22	-17	4	-3	-2	3	-9	1
-6	1	-13	11	0	14	6	-15
-4	-16	-2	17	-11	-20	10	11
-8	5	2	16	-14	-17	11	11
-11	-6	12	-7	-10	12	5	-6
-4	8	-5	-2	3	28	4	-13
3	0	-7	3	8	6	20	-12
18	-19	10	-11	0	-5	11	-9
0	3	9	-2	-5	-7	3	18
-16	-2	6	1	-7	12	1	-16
1	4	-5	5	2	15	3	-8
-11	5	-3	15	-8	8	7	-1
7	4	6	-2	5	-9	2	12
-2	33	-18	-6	0	4	11	-18
-1	3	-1	1	1	0	-1	4
0	-5	0	1	2	4	4	-1
2	-3	-2	0	6	4	6	-1
19	42	-37	-4	1	19	-4	-15
0	2	0	-5	0	10	-5	0
0	3	-3	0	0	-3	-4	2
2	-10	4	-6	1	4	-7	27
-34	17	-9	5	-13	15	-5	-7
7	-2	-2	7	-2	9	11	-15
7	11	1	5	1	15	31	-9
-15	2	4	2	4	3	-8	-1
-7	2	-17	6	-14	11	-2	-11
1	1	9	-11	-6	9	-11	-14
8	10	11	-3	-9	16	13	-8
9	-8	6	0	-2	6	-8	13
3	-2	-3	13	-6	10	4	-17
5	14	-6	4	10	-12	8	-7
-8	21	15	-30	1	-2	-9	11
1	-5	-1	0	-6	-1	3	-2
7	-5	5	9	2	-5	1	0
2	-1	-17	20	3	-15	7	3
-17	11	-6	-13	18	-3	-15	17
-4	-4	22	-5	-14	16	10	-2
11	-7	-7	8	0	-3	11	-7
-11	7	-8	-7	22	14	2	5
13	6	-2	-12	3	10	-21	0
20	-4	10	3	-10	21	8	-12
2	11	2	-5	3	1	15	-1
-2	-1	-2	-1	8	-13	0	-4
-2	7	8	-17	5	18	8	3
-2	-8	-4	3	-18	14	14	-13
-13	15	-2	-1	11	4	12	1
-6	13	-16	-4	16	-17	-2	21
-11	5	19	-9	-17	21	-17	-3
12	3	-12	8	1	-6	9	-7
-7	9	-1	-5	5	-3	-4	-6

5	11	-20	12	10	-6	12	4
-5	8	15	-10	14	13	-15	10
1	-13	14	6	-17	15	4	-13
10	-5	-6	7	-3	-8	12	-4
-1	25	-5	7	11	-7	17	1
-15	13	-4	-14	3	5	-3	8
2	-2	6	0	-12	16	-4	-6
-3	4	-10	7	-7	-3	7	-13
10	-8	-13	-3	2	5	9	4
17	9	2	-13	1	11	-4	6
-10	8	1	4	-15	19	12	-4
[illegible]	31	-17	-5	9	-4	7	-2
-6	14	-6	-6	13	-14	-5	17
-14	4	7	-9	-9	7	-16	3
11	-15	6	11	-11	4	3	-19
8	5	-14	13	3	-14	12	-4
-4	-2	-4	10	-1	-7	5	27
-16	2	4	-18	-2	12	-2	-3
1	-1	-12	-8	-4	3	15	8
4	2	-13	9	9	-14	5	-7
2	4	-5	-10	2	-7	4	1
-6	-1	6	-15	10	1	-10	5
-1	-9	-3	13	-21	5	8	-11
5	8	-21	27	-5	-18	15	-1
1	11	-8	-16	0	-11	-8	5
13	-12	22	-17	-6	4	-18	-1
0	-10	2	19	-8	-2	-3	-7
-2	2	-17	-9	4	-5	10	4
-6	8	-5	-19	12	-4	15	14
-9	10	-9	-1	12	19	-1	0
4	2	9	7	-16	16	9	-14
3	-4	0	1	10	-2	-1	-1
-8	12	-9	12	25	0	9	7
31	2	-4	-9	4	15	1	-5
11	10	10	8	-6	0	11	5
-6	-1	-10	4	6	-9	5	4
6	14	-2	-17	12	17	2	-9
25	0	5	-14	14	20	-20	8
2	5	3	-2	-13	9	-1	-3
3	6	-6	7	2	0	1	3
4	8	3	-15	18	10	13	-4
22	8	9	-10	-15	19	-5	7
-2	13	9	-4	-9	2	0	-6
1	2	-6	-9	1	6	11	-1
1	4	5	4	18	-10	2	7
9	-4	0	11	-7	32	-16	4
0	1	3	6	3	6	16	-14
2	9	1	7	5	0	3	5
2	3	8	3	4	-6	2	6
12	4	2	15	8	8	3	9
6	18	11	34	15	12	2	-1
2	9	-4	-4	4	2	-3	2
-6	18	-8	-12	15	-1	-4	20
11	1	6	-5	-11	6	7	-15
[illegible]	3	2	10	-10	8	8	5
5	15	17	5	13	-13	7	11
-4	8	1	-6	-3	-14	-2	6
[illegible]	1	10	-1	-15	10	0	5
-4	10	7	-3	19	-4	27	-15
18	11	-19	3	6	-2	12	0
0	12	0	-5	-5	4	5	1
[illegible]	10	21	-11	1	29	1	-2
11	-4	13	-1	-20	11	4	-1
4	4	6	-5	2	-13	9	11
7	2	-3	-7	-1	-10	12	20
19	1	1	-19	4	5	25	-7
1	14	2	-3	-4	12	-3	-3
6	2	0	1	2	3	1	3

-8	12	-12	3	10	-10	0	13
-14	23	10	-18	15	0	-12	3
-5	-3	-4	5	-14	2	8	-10
9	2	-11	-1	5	-3	2	13
-6	9	-7	7	17	-30	13	6
-14	1	-1	0	-9	6	3	8
0	-4	-7	-1	-13	-5	-3	-19
4	-4	-2	-6	1	-13	3	-2
1	10	-18	3	17	-26	-16	-4
-3	4	-4	-13	-11	-6	-21	-4
8	7	5	2	-6	13	5	1
7	8	-6	9	1	-6	2	-1
-1	-3	-2	0	0	-2	3	-1
-14	4	-9	-8	2	13	-23	50
8	-8	11	7	3	16	0	-7
6	-2	-1	5	-2	1	3	4
3	1	1	1	3	-6	6	6
-2	2	10	-3	-8	2	-5	-5
4	5	-2	4	-8	10	-1	-40
8	21	-4	3	13	-1	7	4
0	2	-8	-4	2	5	-5	7
-8	5	-1	-4	2	12	-13	12
0	-9	-17	1	-43	9	-5	1
1	12	6	3	-1	1	-2	3
-2	6	1	-1	4	0	14	8
-7	4	-5	-23	-17	23	-15	-6
7	-8	-1	10	-16	7	-6	4
3	2	-3	-3	8	-1	4	-1
4	10	1	-4	-3	7	11	2
-6	4	8	-3	4	5	-45	1
-4	-6	2	4	-14	1	1	-10
6	1	-8	2	-3	-1	3	3
-1	1	-3	2	9	-8	3	3
-5	-2	8	-8	-7	7	-6	-4
-9	5	-2	11	-5	46	9	-1
0	-2	-5	3	-5	-3	0	7
1	-4	-1	-2	11	-11	-3	8
-10	-2	4	0	9	9	-17	-17
-4	-34	-7	-5	-12	-3	11	-3
3	18	-5	-2	-5	-18	6	-3
-5	7	1	-3	-3	-4	-1	-5
5	2	3	-2	12	-10	-5	-18
12	-10	4	-9	2	-6	16	0
15	-17	-12	14	-2	-10	-1	-9
-5	4	-5	-3	-1	-3	18	7
12	-7	5	3	-4	-8	1	-20
1	25	13	8	8	-10	-1	-19
10	8	9	6	0	-1	4	12
5	-4	-1	0	5	2	-2	-8
4	-6	9	-8	2	3	4	-7
13	-25	10	-23	15	14	3	-11
4	-18	-4	16	-10	1	3	-10
-3	5	-3	-1	1	4	-4	-3
1	-5	14	-12	11	-7	6	-15
24	-6	13	-4	15	-1	8	-13
7	3	2	-5	0	2	-7	3
1	-3	8	0	-1	6	5	6
-2	-5	4	-12	-2	0	5	-3
0	-6	9	-8	4	-10	12	-28
11	-20	7	-13	1	-18	1	-11
-4	1	5	-15	-13	0	13	-5
4	-11	-5	-4	-14	5	0	-16
[illegible]	-14	12	-20	-7	10	6	-5
22	6	-4	6	3	-2	11	8
-11	13	16	-2	-7	16	20	0
-1	-7	5	0	12	-9	-5	-2
5	-22	12	-10	11	-4	21	9

15	-8	0	4	-4	-8	10	-4
-4	18	0	-13	-15	1	-3	-1
10	2	6	-1	-4	1	-5	-20
6	-8	17	-8	5	-5	8	-10
6	-22	-2	-5	-17	8	2	8
-2	1	6	-9	-8	-31	8	-8
5	0	-4	-9	3	2	11	-12
10	-18	3	-5	13	-11	11	-6
12	-3	3	-7	-1	-9	11	2
-6	-9	-8	21	4	-15	12	-11
17	-11	2	-1	0	-6	13	-15
19	-12	2	0	-3	-6	10	-9
17	3	5	-2	-3	-10	1	0
-6	4	-10	5	-5	1	0	1
0	0	7	2	2	-2	0	-2
3	-4	1	-4	6	-12	16	-49
13	-10	-2	0	6	8	8	1
-8	5	9	-7	-5	13	0	7
11	10	-3	-4	13	-1	6	-14
-6	-15	16	-14	1	15	-4	-18
20	-20	-1	-7	-2	-9	10	-10
4	-12	10	0	3	0	4	8
-1	-27	19	-2	2	-4	3	-13
9	1	1	-12	19	-22	4	-5
12	-9	9	2	11	-8	7	-3
5	4	-6	11	-17	17	-4	5
-6	-2	-5	1	4	2	6	-14
19	-20	12	-20	5	-21	13	-14
11	-2	-3	4	-10	0	-2	-4
-1	-2	8	-3	-7	-9	-3	-22
13	24	10	2	5	-15	4	-9
9	[illegible]	15	-5	11	-8	6	-13
19	-4	12	-8	6	-4	7	9
-3	2	-1	2	3	0	2	1
-4	1	-3	-2	5	1	6	-12
14	-16	10	-27	17	-14	16	-15
9	-2	9	-25	16	-10	9	4
[illegible]	3	3	8	2	2	-8	-4
10	9	11	3	-10	25	27	-28
[illegible]	9	9	13	4	-2	-8	-12
6	14	10	7	3	3	5	-3
3	-8	10	1	-3	8	-4	-9
[illegible]	13	4	2	4	-10	7	3
2	18	15	22	20	4	5	-7
13	6	4	1	-6	7	13	6
3	2	2	0	2	-4	0	0
2	1	5	2	1	0	0	-4
3	2	2	1	2	-1	1	8
68	24	8	3	3	3	-1	-1
2	15	7	-9	8	-1	8	-14
6	3	1	0	8	-8	2	-23
17	14	8	15	7	-4	0	-18
3	-8	-4	1	4	-10	4	-1
0	8	7	2	5	0	3	1
4	11	14	-8	20	3	26	1
13	11	20	13	0	-2	2	-8
6	-6	9	-1	-6	3	10	-3
0	5	7	1	1	10	5	-3
7	4	1	-5	-1	-3	-3	12
7	-15	22	-9	8	-19	4	-9
13	-23	6	-14	-14	-6	7	-4
5	14	10	-8	3	25	-7	-23
0	-28	-9	-1	1	4	20	-13
10	-8	8	-16	-13	12	5	-21
11	-13	1	2	-7	12	-10	2
-4	5	5	9	35	-6	8	7
2	15	-9	1	2	-6	7	-18

6	-15	2	-3	12	8	7	-30
20	-4	6	2	-6	13	0	-4
8	1	9	-9	12	-5	16	-9
16	-9	14	-17	15	-13	14	-18
17	-15	14	-12	7	-13	13	-16
5	-9	10	-11	6	-9	13	-12
-4	-10	3	5	6	1	-14	8
15	-5	4	7	7	8	8	-22
-8	-7	26	-15	13	1	17	-3
9	-5	4	-2	3	-6	9	-8
-3	8	3	2	1	3	-1	-2
8	-11	0	-4	-5	-6	13	-1
9	-37	-6	1	-2	-10	11	-10
13	8	-2	-3	8	-6	13	-4
2	3	-4	-3	7	-4	9	-8
9	-8	12	-20	15	-19	17	-18
7	-15	20	-1	6	-11	3	-6
9	1	-14	2	-2	-2	1	2
1	-7	-3	-1	4	-6	-3	4
-1	3	-4	5	2	3	9	-1
5	-59	30	-4	3	3	-3	-2
2	-1	1	2	-1	-1	1	-2
-3	0	0	2	-8	-1	2	0
4	-3	1	-4	6	10	8	-6
4	-7	11	10	27	-41	3	-20
8	-3	11	1	-8	-5	4	0
1	5	-2	4	2	1	6	-1
2	-7	4	11	0	0	7	-8
0	-10	8	0	10	2	1	-1
44	-2	-21	-2	-3	-12	2	-1
4	-4	-2	-2	-8	6	1	2
14	-10	6	8	1	5	4	-2
4	-13	5	2	-2	10	32	-21
18	-3	-6	9	-9	-9	2	10
-16	9	-2	-6	4	1	2	22
1	-2	-2	-3	3	-9	19	16
-6	-24	-5	-6	-7	-8	-7	8
-12	-1	-3	5	4	0	-3	2
3	10	-4	-16	13	-1	4	4
-3	1	-6	1	18	-14	8	3
-28	-8	4	-16	2	4	7	12
-4	9	5	-4	-1	-1	2	2
-13	-5	-3	-22	21	-8	-9	-2
-4	21	5	-9	15	-8	1	5
-9	-5	-2	-7	-5	-5	5	-1
5	-5	10	3	0	-4	-2	-7
-10	5	2	-18	4	20	-10	13
-15	8	-3	-11	16	-1	9	10
6	-8	-5	7	11	6	17	5
7	-4	5	-11	-6	-3	1	2
-5	3	1	-19	-3	1	-25	-2
-17	-11	-13	0	10	-4	2	10
4	-5	3	0	-5	-3	-2	-10
-22	13	3	0	-5	-11	-1	7
-14	12	6	-29	10	-1	-17	7
14	-12	9	3	9	-9	6	7
-13	-3	5	0	-1	3	-1	-6
2	0	-12	4	-1	-5	11	2
-15	12	-2	-7	17	-12	-16	20
-12	-2	13	-6	12	-6	9	11
-6	7	-4	7	6	-19	2	2
-11	3	-4	-10	-3	-5	2	3
-22	11	0	-6	18	8	-11	3
-7	-4	-17	-15	6	-12	4	16
4	-9	3	-5	-16	6	-7	10
-3	-7	0	5	-15	1	5	-4
-22	12	5	-16	8	-6	-4	12

-17	-9	3	-11	8	5	0	-17
-4	11	-6	-13	-1	2	3	-1
-11	3	-1	-12	1	1	-2	12
-10	8	-5	-33	-6	-3	-7	1
-4	-8	-1	-6	-4	5	-12	-6
-8	-16	8	11	7	-14	11	12
-14	4	6	-3	-5	-7	3	-3
-8	0	2	-7	24	-4	-9	2
-3	-11	11	-7	17	-12	-1	1
5	3	12	-7	11	4	3	0
-18	2	4	-3	-6	7	15	3
-15	10	-2	-16	-9	-4	-15	7
2	-6	13	-16	7	-8	-21	19
-12	-4	-3	-9	6	-3	-3	11
-19	-1	-7	3	-4	-9	-6	3
-10	-5	0	-21	-7	-3	-21	18
-5	15	-4	-12	2	-13	-9	6
-11	-9	13	-4	6	-3	-1	4
-9	7	9	-4	2	5	3	6
-1	15	-2	-27	3	10	-8	7
-2	9	1	7	-5	-7	9	18
-17	-11	7	-2	11	-9	0	10
6	-8	-3	-16	-7	2	11	3
-9	4	19	-39	-13	6	-5	13
-15	-5	9	-2	4	0	6	14
-4	-10	2	-5	-2	-4	-11	5
3	3	-2	-2	9	-7	-10	7
-11	5	10	-8	12	-2	0	16
-2	12	8	-6	8	14	1	7
30	18	10	4	-6	-4	-11	2
-10	9	5	-8	0	0	6	-7
-16	-1	11	-10	13	0	-4	12
-5	-4	12	-21	13	4	-7	14
-16	6	8	-13	9	2	-12	15
-9	1	10	-22	9	-9	-7	9
-12	4	1	-27	11	-2	3	15
14	14	0	-9	16	-9	10	22
10	16	-5	5	1	-9	6	1
-4	6	-17	2	-6	-5	-1	-15
-12	7	1	-17	5	-9	-7	20
23	3	-8	-8	-1	-8	17	13
-13	-7	-4	4	14	7	11	8
-3	-3	0	4	6	4	-9	-1
-15	7	-4	-15	12	10	-13	3
14	6	-8	9	14	-15	-5	23
5	-10	15	1	-7	-10	9	1
13	4	10	-10	-3	7	3	2
10	4	0	14	4	3	-9	0
-4	3	2	11	8	-17	15	2
12	6	15	-12	17	-5	3	18
3	-3	-6	-4	13	-8	10	4
18	-2	10	-26	10	-4	4	13
-16	-4	17	-7	5	-3	2	-4
-10	-15	-8	-1	-3	-7	2	2
-10	8	2	-7	-4	2	-1	4
19	4	-1	-5	-6	-1	-8	2
16	10	-6	-28	-1	8	28	11
10	2	6	-4	6	-6	15	11
-2	-4	3	7	-7	7	1	4
-6	-3	-5	-10	18	13	-15	10
-3	-5	5	-13	2	1	-5	18
-10	-10	4	-7	1	2	4	5
5	2	8	4	-17	-9	7	7
12	20	-4	-2	14	5	-11	7
-16	-1	-4	-6	17	-11	0	14
-10	-8	10	-8	5	3	-16	10
-6	3	10	-14	9	3	3	0

-10	12	0	-36	15	7	-16	2
-1	2	-1	0	4	5	-3	5
-10	1	-1	5	-3	-15	12	-12
5	2	5	-1	-3	6	2	-2
-15	17	23	-31	15	-4	-3	-2
-7	6	1	-5	4	-12	8	6
8	-10	5	3	1	-4	3	5
-4	-1	1	-3	-4	10	-2	-2
-18	6	-12	-5	12	10	-11	14
2	15	-6	-9	-2	-5	4	-9
-28	-5	14	-4	-16	0	14	9
3	-1	-4	-4	1	2	4	0
-14	-5	8	-31	7	16	-13	13
6	5	10	-16	2	-5	2	-2
-5	14	-5	8	-16	7	-13	6
0	-5	8	-5	-1	-3	3	4
-2	1	0	-1	5	6	-4	2
-1	-3	1	0	2	4	28	43
-35	-12	-2	-2	-1	-7	2	0
-2	-1	1	-2	0	-4	3	-2
-9	2	12	-22	3	3	-4	-7
-22	-19	-4	-14	21	-1	-3	9
-16	-15	1	-13	4	-11	1	-9
-1	-7	0	-1	9	-2	-3	-13
-3	-1	0	-23	12	2	-9	3
7	-4	9	3	1	-10	28	27
9	0	-2	-15	1	-2	8	6
7	-8	20	-3	0	0	-6	-1
11	-1	-2	8	5	1	-1	-6
2	4	0	-4	-5	-1	-6	4
-12	-10	1	19	9	-7	-9	-8
-11	-16	12	-2	4	14	34	4
7	17	1	-6	-10	4	4	-5
3	-11	4	-18	-13	14	1	-3
0	0	0	-11	-17	7	4	-4
-6	-11	18	-8	0	0	26	0
-7	-6	-1	-1	-8	11	3	1
11	2	-6	-6	-3	10	-3	1
4	7	-8	-12	-9	0	-22	8
0	-5	22	-6	11	-2	24	-13
4	-3	3	0	10	9	3	-1
-12	-9	-5	1	0	18	8	-3
15	25	2	-8	-2	2	8	4
-1	9	10	-5	1	-3	23	-1
2	-5	-1	-9	0	-3	-1	3
-4	-10	-13	0	9	16	-14	-1
6	2	-6	-2	-2	-5	7	-7
3	5	-2	11	0	-14	30	-9
6	4	5	6	-1	-3	5	4
0	10	-4	5	-11	7	14	14
34	7	0	-9	22	-10	-1	-7
-9	7	-8	2	-7	0	29	-5
3	-4	-4	-1	5	-3	-4	1
2	0	2	4	-1	1	1	-10
-6	6	1	-4	-3	4	-5	-3
3	0	-12	7	-2	0	55	-10
9	5	0	-1	9	4	-9	-21
2	4	-7	6	-7	11	-5	1
-4	0	-3	2	-8	-13	-9	0
2	-4	-2	16	-7	-15	31	-11
2	8	0	-1	-5	3	5	-5
-1	1	1	-9	-6	0	-1	-2
2	5	0	0	20	12	1	-19
-12	8	0	-11	-5	6	31	2
-1	-1	1	-2	3	-1	-5	-9
-2	8	-1	5	-2	0	-2	4
-12	-3	-2	0	0	3	4	9
21	-1	3	-8	9	-4	30	-6

0	-4	17	-7	-12	10	-10	-2
-3	-12	0	10	-4	11	-3	-13
6	5	7	10	0	-8	-13	-7
0	1	7	-2	4	-12	24	-3
9	-13	-2	4	-4	2	-1	-14
-5	-3	4	-10	-2	13	13	5
3	8	1	-2	-6	5	-18	7
1	-10	5	-1	1	4	25	0
-1	-5	12	18	8	8	-1	-16
1	1	-4	1	3	-5	4	3
-11	4	-16	-12	2	-6	-13	12
9	0	9	7	0	-9	24	-10
1	-4	0	-3	-4	2	1	4
0	5	2	-3	-2	-3	-1	2
4	1	-2	-1	1	-2	-1	-1
-1	-4	-2	-4	6	-6	69	12
5	8	0	11	-4	-15	6	13
-4	0	1	9	-3	-5	0	15
6	1	0	-5	6	1	8	5
7	0	-1	1	-11	-4	41	-9
-9	-4	-6	32	7	0	6	-4
1	-6	-2	-6	-8	4	-3	-5
-1	-16	-6	-2	15	1	21	0
-3	3	3	-4	16	-12	27	2
5	-6	-9	1	3	-5	-3	7
5	5	13	14	-7	20	12	-1
10	-1	-11	-11	-4	-7	7	-14
13	-14	18	22	0	-1	28	14
3	-8	0	-2	6	5	-4	-1
3	1	3	-7	-15	1	-9	4
-10	22	-4	-9	8	1	9	-4
2	-15	-4	-6	12	-16	23	-10
0	0	0	2	3	-1	-1	-3
-5	3	1	7	-5	5	1	-8
-15	13	-7	-5	-6	12	3	-2
-5	10	17	-8	-11	-5	23	-14
-4	-7	-4	6	-6	5	2	-5
11	-4	-4	9	-2	2	6	-4
3	15	18	-3	-2	-13	3	-6
-20	3	11	17	2	-4	29	3
1	6	2	-6	0	3	-3	0
3	3	3	-1	-6	-4	-7	-6
-2	-3	-2	-7	5	-4	-5	3
-13	-20	10	-4	-29	-14	37	14
4	3	-6	3	5	-4	3	0
3	2	-2	0	0	4	-5	-3
4	-4	4	-4	3	4	-4	1
-9	-4	20	-14	3	-30	33	-18
2	0	-2	5	-2	-4	2	-1
-3	-6	-2	-2	-5	2	4	-1
2	3	0	-3	-1	-1	-7	-10
-4	2	2	-18	-1	-37	40	12
2	-7	0	-1	4	-2	1	-8
12	-4	4	7	-7	15	-9	1
0	18	-17	12	-1	-3	0	0
2	0	0	-6	-3	-4	26	-1
4	-6	-5	8	-2	-6	-1	2
-1	1	8	-15	-1	7	-4	-17
5	1	-11	6	14	-6	-5	17
11	-15	0	8	-15	-3	28	-6
0	-1	0	0	0	1	0	-1
3	1	-2	2	-1	3	2	-1
-1	2	-7	-1	2	1	0	-9
-4	-1	7	-18	49	-10	32	-13
-3	-1	1	4	-5	2	-7	1
5	-1	4	-9	25	4	-1	1
-5	2	-7	2	-2	17	-5	10

2	0	3	-15	7	-9	30	-9
-1	-5	2	0	-1	1	5	2
3	-33	14	-5	7	11	-3	5
-8	2	-2	-4	-6	-7	-8	4
-8	-1	-2	2	-1	-8	27	-4
0	-1	-2	-1	-1	1	-1	-2
0	2	2	1	4	2	3	1
2	4	-7	1	1	-4	-4	-3
-15	-35	10	17	-26	-3	32	-7
1	-5	-2	6	6	6	3	-9
-4	-1	-4	5	-2	-2	2	-9
2	-5	4	2	5	3	-16	-5
-12	-31	2	-11	20	-19	21	-2
2	-5	-7	7	5	-7	2	-7
0	0	3	-4	0	-1	-2	-1
-3	0	-11	5	-3	-8	-7	-7
-11	28	0	-7	-11	-16	29	-4
1	2	-2	-3	3	-1	0	4
0	1	-5	-1	-5	4	2	-12
-5	-2	-2	-22	11	-1	-7	8
0	-12	6	-34	11	-5	19	-8
-3	-1	11	5	-2	18	-5	-2
4	-2	8	-1	-6	5	-1	1
8	2	-5	4	-2	-8	-18	5
12	7	19	7	2	-18	-13	-6
0	9	5	0	3	4	4	-6
-4	1	-1	5	8	-4	6	8
-6	-8	6	0	3	-3	-3	5
31	17	10	16	0	-13	-19	-9
-10	12	-2	2	-1	-2	6	-3
-5	-12	14	-2	4	-16	12	12
4	17	-16	7	-6	7	7	11
2	7	23	-25	5	-24	-9	-7
4	10	10	13	3	10	3	-6
2	3	-6	-1	4	8	0	10
2	1	2	-4	-8	-3	-1	0
9	9	-3	-10	1	-29	-27	-1
2	2	7	0	-2	9	-1	-10
1	-1	-5	-9	4	8	2	1
1	-10	12	13	15	-3	2	-9
1	-7	23	-10	-18	-20	-15	-9
-5	-3	8	-1	-5	0	4	-1
-1	7	2	-7	-5	-8	7	11
3	-6	-9	-3	9	7	1	-22
-4	6	27	14	-14	-25	-5	3
3	1	4	8	6	7	-17	12
1	-15	-10	-8	-14	7	6	-8
-2	-2	-11	-11	13	-7	-2	-2
5	4	13	-5	-6	-23	-8	-17
4	-5	-5	-14	-5	-4	5	6
-5	-8	-11	-2	-12	-7	-11	3
-6	2	-10	4	-7	-5	5	14
11	23	12	7	-6	-16	-16	-4
6	5	5	2	-5	-2	-6	-5
-19	-5	-1	-13	-13	-3	0	5
-2	6	-6	-2	-7	-7	-9	-1
14	4	-12	17	3	-27	-1	0
-1	7	-10	9	2	8	-2	-7
2	5	-7	-3	0	3	4	6
5	12	14	11	-1	-13	1	8
9	13	12	12	-14	-18	-16	-11
-5	-7	-5	-6	-1	0	2	-3
1	2	9	4	3	2	-2	5
1	2	0	8	0	3	2	-2
7	1	0	29	-5	-36	-21	-9
-6	14	0	-9	-8	-1	-11	-8
2	2	-12	-9	-4	12	3	5

```
-9  -5  -1  11  12  -3  -3  -21
 5  12  11   3 -15 -18  -2    1

 3  -1  -3  -9  -7   7   2  -18
12   4   2 -10  -3   8  13  -14
-5  17  -9   5  -3  13 -18    7
-2  17   7   5  -3 -20 -11   -6

 3  -3  -1   3  -6   1   1   -5
-3   5  -6 -14  -8  -5  -6   14
-1   7   1   5  -1  15  -4   -7
-11  6  -2   9  16 -37  -3   -7

 0  -1   1   6  -9  -3  11    0
 2  -8   0  -2   2   5 -10   12
13  10   7   2   2  -6 -10  -10
-5  21   5   5 -23 -12 -14    3

 0   6   1  -2   1   0  -4    0
 1   1  -2   8  -5   2   1   -2
-4   8  -1  -1  -1   4   6    2
 1  32 -20  -5  -4 -40 -14  -18

 2   2  -2  -7   4   4   2   -1
-2   0  -7  -4   5   3  -5    0
 2   1   4  -6  -2  -1 -15   -1
 3   8  46   9 -18  -7 -11    6

 5   5  21  16 -11   3  11   -4
 2 -12 -12   4  11  -1   1    8
11  -4 -21 -11   1   1   3  -11
 1  13  12   5   1 -25  -2   -3

 6   1   4  -7   3   2  -5    1
 9   8   3 -15 -14  -3   4   17
14  -8  -8  -2   5  -4  -7    8
 9   8   6   7 -17 -29   4    8

-7  -7   0   4   1  13   4    0
-16  4  -7 -10   9   5 -10  -15
 8 -10  -1  -4  -1 -11 -15  -10
 3   3  10  14   2 -19 -12  -18

 0  -4   0   2  -2   5   0   -9
-4   4  -1   2   2  -2   9   -4
-6   2  -2  -4  -3  -1  -1   -3
 5   2  11  -1 -44 -24 -15   -9

-10  -1  21   6  15  11  10   -7
 -9 -14  -8  -8   6   4   1   19
  1  -6 -17  -5 -10  -8   5    9
 18  11  10  -1  -7 -16  -8   -9

 -5   3   0   0  -2  -2   4   -6
  1  -4   0  -1  -3   7  -4    4
  7  -2  20  17   4   6  -6    1
 31 -12  19  13 -10 -14  -2   -7

 6   2   3 -10   6   9  15  -14
-5   2  11   2  -8   9   6    4
-15  20  -3  -3  32  -1   6  -21
 9   1  17  11   6 -19  -3    1

10   8   0  -2 -16  -8   7    7
10   6 -14   4  -6   7  -7   21
 5  10   0   5   2  -7   0   -6
11  -7  15  -9  -7 -20   2  -11

-7   0   2   5  -3   0  -4   -6
-1  -2  -5  -4  -1 -13  -9   27
-11 -6   1  -7  -4  11 -14   -4
11  -2  10   6  -6 -19   2  -15

 7   0   2  -1 -15  -7  -3   -2
-5  13  12  -5   0   3  -5    5
 2 -22  22   7   0  13   2   -1
 2   3   7  -7  -4 -27 -12   -4

 1  11   6 -16   1 -15   2    3
 2   0   2  -3  -2   5   9   -5
-3   5  -2   3   3 -11   6    9
 3   9  12  -1   8 -41   9   -6

-7   3   2   3   5   5  -1    0
```

```
 3   1  -2  -5   7 -13  -2   -1
-6  -2  -6   4   2   0   2   -2
 1   4   1  -4 -21 -47  -6    7

16   5  13  -7  -2  -4  -3   10
18  -1   7 -13  -4 -13   4    8
 9   8  13  -5  -5   8  -6    3
18   7  10  -8  -3 -25 -12  -12

-1   1   0  -1   5   2  -3   -5
-5   0   0  -1  -8  -4   3   -2
-2   2  -6 -17   1  -4  -6   33
-6 -20  31   8  -8 -26  -4   -1

-3   3   5  -3  -2  -3   7    1
 3   0   3   6  -2   6  15    9
-3 -10  -5 -15  -4  -3 -30   -6
-8  17   2  -2   0 -20  -2   -8

-1  -2  -1  -1  -5   3  -3   -2
-2   4   5   0  -3   8  -4    1
 1   1   4  -3 -14   4  11    3
 3  -5   7  -3  13  -3 -16   23

-6   2  -3   1   0   5 -11   -6
-4  -7   2  -1  -1  -7   7   -1
-2   1  12   6   8  -6  17  -13
-23 25  -7 -19   9 -12 -17   16

 4   9   4   4  -1  -3  -2    6
 0  -3  -4  13  14  -7  -7    1
-5   0 -19   3   5  -3   9    3
 9  -1  13 -13   4 -17 -26   21

-5   0   0   0  -5  -4  -6    2
 5  -4  10  -7   2   0  -2    0
 0  -2  -6   4  -2   7   5    6
 2  -5   1 -12  29 -29  12   27

-10   9   6 -22  -1  -1 -14    9
 -2 -12  -1   1 -11  10   0  -16
 11   3 -14  13  -2  -9   6   -1
-14   4 -10   0  16  -2 -11   17

 0   2  -2  -1   3   4  -2   -6
-1   1   3   1   1  -4  -4    3
-1  -1  -1   4   0   1   6    1
-7  -5   1   2  -3 -47 -17   50

-4   8  -7 -11  11  11  -7   14
-7  12   2   6  -6  13  -2   -3
 6 -14   6   6   2   0   5   -1
 2 -20   4  -1   6  -5 -11   21

-9  -2   0   3   7  -6  -8    8
-3   1   1   4  -2   5  -7   -3
 7   4  -9 -12  10  -2  13   -6
 5   6   2  20   9 -15  -7   28

-5   0  -6  -6   1  -6   6   -6
 4  -2  -3   8  -1  12  -2   -4
16   6   9 -14  -2 -14 -27   -8
18  -3  -7  -1   8  -3 -23   23

 4   1  -1  -9  10  -5   1   -2
 1 -11   4  -9  14   7  -2   -9
 2  -3  -1  -5 -10  -6  11   -7
 2  20 -19   3  15   3  -9   30

 2   7  -4 -14  -2   0   2    5
-2   5  -3   8   6  -7 -11    6
 1 -14  -1  10  -8  -7  10    1
-6   3 -12 -15   4 -17  -6   30

 2   4  -2   1   0   3   0    1
 0   2   6   1   0  -7   4    3
-4   4  -5  -2   2  -2  -2   -1
-2   0  -7 -11  42  -3 -14   24

 1   4   2   3  -2   0  -2   -1
-1   2  11   4   2  -2  -4    3
 9  -5  -4   2   5  -9  -1    8
 1  -7 -13  24  20 -28 -22   15
```

7	-3	3	6	-5	-2	-2	-10
-1	-2	-6	-6	-14	-2	-6	-16
0	-5	0	18	1	9	-13	7
-6	-5	11	-9	9	-15	-11	22
-2	9	[illegible]	6	9	2	1	-10
5	1	12	-4	2	2	-7	-10
-6	-4	9	7	15	6	6	6
10	-10	-13	5	6	-5	-12	24
3	1	-3	-3	1	8	2	-6
3	-5	2	7	6	14	-6	9
-4	-5	7	27	8	-3	3	-6
8	-8	-5	22	-2	-6	-17	22
-2	-2	10	3	9	9	-15	2
-11	-1	3	-13	1	-2	-11	-3
9	7	-3	16	-5	-10	1	-5
-3	8	9	9	3	-5	-12	31
-5	7	-4	10	2	-8	-2	16
10	10	-2	-3	-8	3	3	-3
-6	-13	20	15	-3	-9	1	-12
-16	-2	8	8	16	-1	-5	22
-3	5	-2	-15	-8	12	-5	8
-8	2	-18	20	-4	14	3	3
-13	7	1	-16	7	-10	7	16
-14	4	-5	-4	8	-9	-6	23
-4	5	-4	-5	8	1	-7	4
8	-5	6	10	-10	-6	6	-2
-17	9	11	-14	-3	12	-7	-13
18	2	-25	3	18	-16	-5	22
6	5	-20	-7	2	-4	4	8
-4	-24	4	1	-2	-5	-10	1
9	-2	-4	3	-4	-3	-4	-4
10	10	0	3	25	-6	-11	21
7	0	14	-1	-4	-6	5	-10
4	4	-5	4	4	3	-7	-1
-19	8	6	0	3	2	-3	-18
2	-6	14	8	22	-26	-13	27
-6	-2	-5	7	-7	12	-1	8
-2	3	1	4	-2	8	14	0
-5	6	-4	6	7	-7	8	-21
8	1	-4	-9	11	-3	-13	25
4	4	-6	-1	9	4	1	-8
-10	-3	0	-2	-9	15	11	-16
1	1	3	6	-5	-9	26	16
-14	1	-3	1	7	-14	-9	15
2	-12	13	-9	6	2	0	14
0	1	-13	-1	10	0	6	-1
7	9	8	8	6	19	9	-1
4	10	-7	1	-2	22	-7	29
4	2	-12	13	-4	-8	13	-5
-5	12	-3	-3	1	-4	10	-1
-6	15	-11	-1	4	-30	-1	15
-7	9	-2	0	10	-7	-16	25
15	7	-7	-7	-5	-1	-11	-5
10	-20	-10	3	5	-3	-4	20
2	0	17	-2	0	2	3	-3
5	6	-12	-1	15	-3	-16	22
-1	4	4	3	0	-5	-5	-1
-29	-24	-9	4	-3	1	0	0
-4	0	-4	7	-4	-4	1	3
5	-4	-5	-3	3	-10	-10	25
-1	-2	4	-1	-1	4	0	2
-4	-4	-1	2	-1	-3	-2	-2
-3	1	-1	-5	-3	2	-4	-4
5	-3	1	-6	7	-11	-46	46
-9	0	4	3	3	4	-6	-5
-4	5	-2	4	7	1	-10	-4
1	13	-6	3	-4	4	2	7
-25	-19	-16	-3	16	-12	-1	20

6	18	-12	4	-14	0	-6	9
-4	-1	2	-5	12	1	2	4
0	7	5	2	-5	-11	2	-2
10	-4	-9	0	9	-7	-8	25
0	5	5	-6	3	6	-10	3
1	-5	4	-1	-11	3	5	-8
-5	4	-5	5	-5	-7	5	11
-8	20	21	-16	27	-4	-5	23

Table 26

LPC 4-element Vector Look-up Table (8192 vectors)

PVQ	c(1)	c(2)	c(3)	c(4)
0	9928	-2618	-1093	-1263
1	11077	-2876	-1747	-308
2	10503	-1082	-1426	-1167
3	9337	-2403	-1495	274
4	10698	-2529	-532	-1122
5	10368	-3974	-1264	-750
6	10070	-3667	346	863
7	10278	-3093	311	-576
etc	9894	-1330	-1428	-860
	10544	-1922	-1058	-971
	10996	-1632	-841	-1404
	11832	-3465	1658	-1990
	10852	-688	-2658	-499
	10546	-1749	-147	-1733
	10801	-1004	-708	-1453
	10588	-441	-2113	-952
	10141	-3331	-582	-1432
	9608	-2590	383	258
	11422	-3265	229	-1544
	10460	-1338	-713	-1568
	10306	-1721	-1660	-603
	9580	-1812	-1235	-1061
	11471	-2285	-1617	-607
	10081	-2225	-1408	-868
	10715	-2624	-1367	-704
	10616	-1871	-2770	-35
	9352	-2340	-1024	-1566
	11065	-1458	-1926	-735
	11334	-2056	-1041	-1144
	9825	-2048	-794	-1536
	11850	2695	-1123	-867
	10654	-2226	-1891	-373
	10024	-1557	-808	-1069
	11142	-1266	-3238	128
	11729	-3282	-514	-1011
	11472	-2094	-2335	-189
	10195	3658	181	-1875
	11431	-2626	-404	-1377
	11001	3868	-619	1077
	10894	2559	274	1758
	9633	1482	2253	-773
	11245	-3321	830	-1972
	9768	-2701	-199	-1859
	10500	-2042	525	-2043
	11669	-4069	293	-1468
	9192	1991	-583	-61
	10057	-3220	-2015	-473
	9497	2315	-2490	-467
	10455	-3069	-1194	-1007
	9994	-1936	-60	-1225
	9295	-2156	-1761	-1134
	10085	3748	-1026	197
	9334	2360	804	-351
	11561	-2553	1352	-2313
	12837	3998	1195	-1958
	10114	-1100	-2414	-394
	9341	-2530	315	755
	10131	-3164	1411	-674
	9535	-805	-1551	579
	11717	1519	-3051	91
	9824	-2911	-2775	192
	9662	-2934	-561	1450
	11085	-3392	-1298	-659
	8955	-2102	-1899	703
	8607	-1742	-4348	814
	7640	-2063	-3617	52
	7074	-826	-4325	4375
	7714	584	-4238	1927
	6355	-952	-4912	3127
	7069	-660	-6413	4087
	8313	-132	-2964	-876
	6952	-1422	-3962	-24
	9299	-734	-3088	-263
	9484	-574	-4513	466
	7246	-91	-3735	-704
	8325	-1417	-3090	-530
	6469	-1226	-4757	829
	6652	-368	-5682	1393
	7971	-1278	-2284	1205
	7229	-699	-3556	1840
	7994	1284	-2729	732
	9005	-698	-4522	2189
	6963	197	-2727	380
	8527	135	-3991	-213
	8840	934	-3014	-567
	10125	418	-3284	-371
	6367	361	-2318	2554
	7892	172	-5247	4673
	6674	387	-5424	4398
	6240	684	-4047	1219
	11170	-794	-5081	1195
	11765	-648	-6265	2052
	10845	-775	-3837	366
	12496	-689	-8260	3562
	7893	-1166	-4972	988
	8592	1052	-5986	3087
	7277	1874	-5685	3579
	6900	2016	-4809	3491
	8530	-2405	-3250	1986
	9426	494	-7067	5038
	10285	564	-8210	5370
	8749	-2207	-3980	2852
	9653	-2686	-4300	1400
	9770	-2286	-5663	4233
	8490	-4	-7048	4496
	7697	-1209	-5328	3183
	6451	801	-4324	-554
	7387	1806	-5265	545
	7450	-2302	-4445	1418
	8817	-1370	-5827	2168
	10324	2406	-5629	2579
	8863	-2578	-3537	467
	6901	-1624	-3169	3392
	7846	156	-6948	3381
	7928	-1115	-5972	4816
	6089	-599	-4368	-320
	7833	1246	-3960	-621
	8931	2521	-6768	2052
	8900	1944	-4126	40
	7661	-34	-2855	2480
	5873	474	-3262	3712
	7535	-234	-4699	216
	5856	143	-5142	73
	8944	-106	-5874	3663
	7134	426	5879	2895
	10199	1011	-4762	369
	8454	264	-5971	1291
	7822	-2449	-4333	4540
	6200	-2758	-2632	1497
	6070	-4315	-2699	414
	7047	-3739	-3210	1060
	5675	-3801	-2717	-407
	4789	-4063	-2628	-744
	4023	-3366	-3133	-726
	4296	-2407	-3381	-513
	4388	-2931	-2820	1512
	4559	-4233	1941	1976
	6702	-3208	-1755	1680
	4416	-3521	-1052	2984
	7154	-4266	-1203	3732
	3625	-4242	-3244	1395
	6518	-2856	-1304	2887
	6170	-1949	-3014	3973
	5189	-2451	-4020	3477
	6218	-2988	-1921	3844
	4827	-3688	-1928	3343
	6668	-3991	-2805	3095
	5297	-3115	-3684	2390
	5354	-4614	-2662	1504
	4196	-3091	-4147	1135
	3540	-2893	-4007	100
	5569	-1602	-4007	1909
	4341	-2091	-4272	252
	5559	-2878	-3832	498
	4548	-4479	-2898	-27
	5176	-2494	-4635	1476
	3294	-3485	-3738	716
	4920	-1229	-4195	-365
	3257	-3518	-3349	2862
	5286	-1948	-3485	-778
	6502	-3051	-152	2854
	5864	-4192	-1076	3451
	4656	-3122	-3448	179
	5907	-754	-1596	3116
	7229	-3680	-1590	2892
	5107	-3888	-3364	806
	6764	-2635	-3450	134
	5258	-2827	-2844	-1052
	5798	-1725	-4305	205
	5404	-1213	-3362	449
	6224	-2738	-3046	-581
	4223	-2438	-2725	3745
	4751	-3411	-2123	116
	3868	-3000	-3954	2297
	6819	-2899	-4277	2825
	4207	-4754	-2808	865
	4804	-1494	-1997	4688
	5282	-2213	-548	3559
	5580	-1912	-566	4370
	6168	-2857	-672	4053
	6583	-4515	-2850	1670
	6511	-3093	-3988	1421
	4646	-1790	-1443	3650
	5915	-924	-2020	896
	7814	-4181	-3152	2007
	6190	-2238	-4817	2279
	4737	-4034	-3288	1835
	8161	-3633	-3423	3137
	7415	-2351	-2088	4290
	4106	-2517	-62	2905
	4909	-3145	-614	4112
	4938	-3281	-397	1100
	-173	919	1589	-5363
	-13	796	-295	-6655
	-1860	-829	1141	-4555
	2298	-838	-664	-5005
	-884	-1097	2074	-4613
	-101	281	2846	-4535
	1166	453	2429	-5910
	879	-664	2370	-5452
	1415	-370	-1699	-4727

Table 26

LPC 4-element Vector Look-up Table (8192 vectors)

PVQ	c(1)	c(2)	c(3)	c(4)
0	9928	-2618	-1093	-1263
1	11077	-2876	-1747	-308
2	10503	-1082	-1426	-1167
3	9337	-2403	-1495	274
4	10698	-2529	-532	-1122
5	10368	-3974	-1264	-750
6	10070	-3667	346	863
7	10278	-3093	311	-576
etc	9894	-1330	-1428	-860
	10544	-1923	-1058	-971
	10996	-1632	-841	-1404
	11832	-3465	1658	-1990
	10852	-688	-2658	-499
	10546	-1749	-147	-1733
	10801	-1004	-708	-1453
	10588	-441	-2113	-952
	10141	-3331	-582	-1432
	9608	-2590	383	258
	11422	-3265	229	-1544
	10460	-1338	-713	-1568
	10306	-1721	-1660	-603
	9580	-1812	-1235	-1061
	11471	-2285	-1617	-607
	10081	-2225	-1408	-868
	10715	-2624	-1367	-704
	10616	-1871	-2770	-35
	9352	-2340	-1024	-1566
	11965	-1458	-1926	-735
	11334	-2056	-1041	-1144
	9825	-2048	-794	-1536
	11850	-2695	1123	-867
	10654	-2226	-1891	-373
	10024	-1557	-808	-1069
	11142	-1266	-3238	128
	11729	-3282	-514	-1011
	11402	-2094	-2335	-189
	10195	-3658	181	-1875
	11431	-2626	-404	-1377
	11001	3868	-619	-1077
	10894	2559	274	-1758
	9633	1482	2253	-773
	11245	-3321	830	-1972
	9768	-2701	-199	-1859
	10500	-2042	525	-2043
	11669	-4069	293	-1468
	9192	1991	-583	-61
	10057	-3220	-2015	-473
	9447	2315	-2490	-467
	10455	-3069	-1194	-1007
	9994	-1936	-60	-1225
	9295	-2156	-1761	-1134
	10085	3748	-1026	197
	9334	-2360	804	-351
	11561	-2553	1352	-2313
	12837	-3998	1195	-1958
	10114	-1100	-2414	-394
	9341	-2530	315	755
	10131	-3164	1411	-674
	9535	-905	-1551	579
	11717	-1519	-3051	91
	9824	-2911	-2775	192
	9662	-2934	-561	1450
	11085	-3392	-1298	-659
	8955	-2102	-1899	703
	8607	-1742	-4348	814
	7640	-2063	-3617	52
	7074	-826	-4325	4375
	7714	584	-4238	1927
	6355	-952	-4912	3127
	7069	-660	-6413	4087
	8313	-132	-2964	-876
	6952	-1422	-3962	-24
	9299	-734	-3088	-263
	9484	-574	-4513	466
	7246	-91	-3735	-704
	8325	-1417	-3090	-530
	6469	-1226	-4757	829
	6652	-368	-5682	1393
	7971	-1278	-2284	1205
	7229	-699	-3556	1840
	7994	1284	-2729	732
	9005	-698	-4522	2189
	6963	197	-2727	380
	8527	135	-3991	-213
	8840	934	-3014	-567
	10125	418	-3284	-371
	6367	361	-2318	2554
	7892	172	-5247	4673
	6674	387	-5424	4398
	6240	684	-4047	1219
	11170	-794	-5081	1195
	11765	-648	-6265	2052
	10845	-775	-3837	366
	12496	-689	-8260	3562
	7893	-1166	-4972	988
	8592	1052	-5986	3087
	7277	1874	-5685	3579
	6900	2016	-4809	3491
	8530	-2405	-3250	1986
	9426	494	-7067	5038
	10285	564	-8210	5370
	8749	-2207	-3980	2852
	9653	-2686	-4300	1400
	9770	-2286	-5663	4233
	8490	-4	-7048	4496
	7697	-1209	-5328	3183
	6451	801	-4324	-554
	7387	1806	-5265	545
	7450	-2302	-4445	1418
	8817	-1370	-5827	2168
	10324	-2406	-5629	2579
	8863	-2578	-3537	467
	6901	-1624	-3169	3392
	7846	156	-6948	3381
	7928	-1115	-5972	4816
	6089	-599	-4368	-320
	7833	1246	-3960	-621
	8931	2521	-6768	2052
	8900	1944	-4126	40
	7661	-34	-2855	2480
	5873	474	-3262	3712
	7535	-234	-4699	216
	5856	143	-5142	73
	8944	-106	-5874	3663
	7134	426	-5879	2895
	10199	1011	-4762	369
	8454	264	-5971	1291
	7822	-2449	-4333	4540
	6200	-2758	-2632	1497
	6070	-4315	-2699	414
	7047	-3739	-3210	1060
	5675	-3801	-2717	-407
	4789	-4063	-2628	-744
	4023	-3366	-3133	-726
	4296	-2407	-3381	-513
	4388	-2931	-2820	1512
	4559	-4233	1941	1976
	6702	-3208	-1755	1680
	4416	-3521	-1052	2984
	7154	-4266	-1203	3732
	3625	-4242	-3244	1395
	6518	-2856	-1304	2887
	6170	-1949	-3014	3973
	5189	-2451	-4020	3477
	6218	-2988	-1921	3844
	4827	-3688	-1928	3343
	6668	-3991	-2805	3095
	5297	-3115	-3684	2390
	5354	-4614	-2662	1504
	4196	-3091	-4147	1135
	3540	-2893	-4007	100
	5569	-1602	-4007	1909
	4341	-2091	-4272	252
	5559	-2878	-3832	498
	4548	-4479	-2898	-27
	5176	-2494	-4635	1476
	3294	-3485	-3738	716
	4920	-1229	-4195	-365
	3257	-3518	-3349	2862
	5286	-1948	-3485	-778
	6502	-3051	-152	2854
	5864	-4192	-1076	3451
	4656	-3122	-3448	179
	5907	-754	-1596	3116
	7229	-3680	-1590	2892
	5107	-3888	-3364	806
	6764	-2635	-3450	134
	5258	-2827	-2844	-1052
	5798	-1725	-4305	205
	5404	-1213	-3362	449
	6224	-2738	-3046	-581
	4223	-2438	-2725	3745
	4751	-3411	-2123	116
	3868	-3000	-3954	2297
	6819	-2899	-4277	2825
	4207	-4754	-2808	865
	4804	-1494	-1997	4688
	5282	-2213	-548	3559
	5580	-1912	-566	4370
	6168	-2857	-672	4053
	6583	-4515	-2850	1670
	6511	-3093	-3988	1421
	4646	-1790	-1443	3650
	5915	-924	-2020	896
	7814	-4181	-3152	2007
	6190	-2238	-4817	2279
	4737	-4034	-3288	1835
	8161	-3633	-3423	3137
	7415	-2351	-2088	4290
	4106	-2517	-62	2905
	4909	-3145	-614	4112
	4938	-3281	-397	1100
	-173	919	1589	-5363
	-13	796	-295	-6655
	-1860	-829	1141	-4555
	2298	-838	-664	-5005
	-884	-1097	2074	-4613
	-101	281	2846	-4535
	1166	453	2429	-5910
	879	-664	2370	-5452
	1415	-370	-1699	-4727

7755	-1514	-2430	-1229
5041	449	-1056	-2405
6710	-2277	-1344	-2284
6824	-1347	-2254	251
6068	-1857	-983	-1316
5603	-2177	-2730	-1477
5838	-1059	-3604	-970
5076	-789	-335	-2413
6191	-1634	-2000	-2129
5092	-1292	-2543	-1034
5305	435	-1710	-1850
6140	561	-2176	-2380
6752	348	-2496	-1890
6405	273	-1098	-2778
6942	-1340	-496	-1381
5238	-687	-2454	-2349
6959	-882	-1833	-2061
6292	-253	-2125	-2199
5838	-574	-759	-3215
6954	-1484	-640	-2771
7498	-1706	-1210	-2154
6772	-1003	-1235	-2532
6014	228	-2154	-1108
6943	-2178	-2644	-1122
7262	-763	-3056	-1090
6273	-1478	-1072	177
4734	425	-2912	357
7129	168	-1537	-2327
7204	-434	-746	-2660
6879	57	-3087	-1310
4623	-610	-718	-3459
6565	-543	-1998	-339
4752	277	-2066	-1405
7435	-1416	-1904	-505
4076	150	-1222	-3556
7082	-28	-1456	-1174
5941	-446	-1326	-1158
3870	-1648	-2474	-2589
858	37	-3387	-3721
3557	-1503	-1664	-3383
3336	-1972	-3079	-2216
3186	60	-4185	-863
3456	-773	-3066	-2457
4131	-913	-2060	-2601
4431	-691	-4114	-972
3461	-334	-3680	-1751
2006	-459	-2214	-3827
1322	32	-2816	-3203
4425	1897	-2791	-1946
4564	23	-3421	-1909
3090	-885	-2366	-3264
3209	-2363	-3730	-834
3312	-1471	-3641	-1579
4184	-1669	-3323	-1248
2190	-931	-3302	-2944
2947	-229	-4791	-1195
2020	-1626	-2700	-3125
2214	-326	-4352	-1683
3286	-2619	-2412	-2458
1000	-2571	-4129	-2158
2494	-2627	-3611	-1433
-	-2191	-2167	-3827
257[illegible]	-2544	-1915	-3222
2022	-1501	-3856	-2165
2685	-1180	-1461	-4038
1610	-2313	-4391	-1173
2340	-2490	-4215	-516
1742	-2615	-3632	-2146
523	-1293	-4246	-2442
3725	-2723	-3014	-1576

3554	-1381	-4200	-824
1291	-1594	-4777	-1430
1452	515	-2960	-3830
4264	-894	-3305	-1826
2606	-1452	-4522	-966
1196	-830	-4807	-1816
1054	-775	-2616	-4071
4206	415	-4344	-1132
3044	491	-4126	-1934
988	-901	-3353	-3443
1729	-3063	-2267	-3370
3915	912	-2989	-2387
3781	300	-2457	-3050
2712	924	-1350	-1206
4230	405	-2343	665
1878	-873	-225	-29
3510	56	-1334	-3420
2850	1447	-2651	-3150
1510	-706	-4125	-2483
3115	793	-1692	-3894
2667	213	-2973	-2786
1184	-2384	-3051	-3173
2139	796	-2079	-3697
1464	-1483	-3726	-2754
2407	-1148	-3915	-1569
2612	-1779	-3217	-2271
2406	-2870	-2937	-2496
2140	126	-3646	-2758
2952	-1036	268	-1423
93	-1931	-3841	-3535
389	-2953	-3383	-3343
8652	-5511	-1662	565
7427	-2791	-2535	-842
8541	-4253	-1407	-988
8018	-3203	-2998	105
7231	-3926	-958	1308
7331	-3690	-363	2586
6803	-3646	-2226	-903
8163	-2811	-477	-2235
9356	-3818	-1685	-684
8466	-2854	-302	-698
8458	-3224	517	279
8074	-2619	-1326	2596
8779	-2761	-2527	-441
6533	-2887	-899	-696
7394	-2305	-1642	-120
8281	-3780	-22	1305
9158	-4413	-779	901
9031	-5240	-1109	1678
8717	-3650	410	-1075
7317	-3197	-[illegible]12	-2264
7934	-2385	-1214	-1886
8256	-4441	-291	-587
7358	-3395	1090	-270
9446	-4910	-1343	-473
8187	-4726	-808	1166
7504	-3845	-47	267
8029	-2146	-1283	-383
7461	-2705	-853	783
9367	-3636	-645	-354
8955	-3473	-308	-1947
8676	-2683	-2099	1485
7481	-3003	-871	-444
8015	-2839	-1673	1175
6947	-4643	-1527	-1047
7622	-2575	-137	-960
9388	-4279	-707	-1322
8382	-5259	-1283	-565
6856	-4138	-1030	630
8659	-2571	-1124	-1666

8763	-3807	-537	2543
8049	-3578	-2186	-604
8272	-2351	-1985	-1214
6855	-3796	-1527	-1631
7178	-2896	-1600	-1756
7040	-2888	-89	-1586
6261	-3403	-264	998
7756	-4699	-1543	-834
7682	-4622	-758	-1721
8839	-4232	-2932	1959
9363	-4679	-1956	39
7883	-3616	-1414	-1432
8828	-3188	-1356	-1312
7746	-3987	-121	-2424
9262	-3256	-693	818
7670	-3420	-148	3504
7344	-3183	608	1595
8976	-4139	-1848	1304
6708	-4131	33	-852
7840	-4429	-2275	79
8980	-3858	-2838	453
7815	-4604	-2563	944
8372	-4422	-1783	3071
8623	-5128	-1754	2888
7462	-3281	889	920
8416	-59	-1320	1825
7928	-1488	-414	-2499
8110	-977	-1047	-2042
8278	-687	-1597	-1550
7988	-174	-977	-2106
8609	-1547	-1628	-1527
9000	-1798	946	-1761
8954	-872	-1404	-1594
8939	466	-748	-1212
9549	-329	-177	-1360
9411	-18	-1126	-1568
8859	-782	-488	-1338
8955	-218	-43	-1209
9131	-69	-453	-1001
9069	-1519	-1091	-1199
9247	-1309	-566	-1146
8528	-1617	-287	-1313
7763	-745	-149	-2040
8294	-343	257	-2633
10149	-893	-552	-1649
9398	-915	218	-2042
9703	-1194	-675	-1592
9586	-700	-427	1710
8930	497	-1445	-1218
9285	-1323	-163	1552
8431	-1289	-985	-1404
8965	-655	653	-1483
9542	-1001	-951	-1128
9205	-647	-37	-882
8603	-56	514	-1793
9300	-12	-1324	-567
8773	238	-184	-1456
9941	-1306	-69	-1792
9360	279	-376	-1919
9180	-285	95	-2170
9922	-501	-970	-1570
8341	-1493	-856	-2092
8780	-981	-850	-1014
9721	-548	-1504	-1094
9973	-1493	482	-2105
8707	-333	-1027	-1087
9098	-469	-315	-1727
8879	-1050	-661	-2020
8857	602	-866	-1918
8945	-1025	-2154	-1071

7755	-1514	-2430	-1229
5041	449	-1056	-2405
6710	-2277	-1344	-2284
6824	-1347	-2254	251
6068	-1857	-983	-1316
5603	-2177	-2730	-1477
5838	-1059	-3604	-970
5076	-789	-335	-2413
6191	-1634	-2000	-2129
5092	-1292	-2543	-1034
5305	435	-1710	-1850
6140	561	-2176	-2380
6752	348	-2496	-1890
6405	273	-1098	-2778
6942	-1340	-496	-1381
5238	-687	-2454	-2349
6959	-882	-1833	-2061
6292	-253	-2125	-2199
5838	-574	-759	-3215
6954	-1484	-640	-2771
7498	-1706	-1210	-2154
6772	-1003	-1235	-2532
6014	228	-2154	-1108
6943	-2178	-2644	-1122
7262	-763	-3056	-1090
6273	-1478	-1072	177
4734	425	-2912	357
7129	168	-1537	-2327
7204	-434	-746	-2660
6879	57	-3087	-1310
4623	-610	-718	-3459
6565	-543	-1998	-339
4752	277	-2066	-1405
7435	-1416	-1904	-505
4076	150	-1222	-3556
7082	-28	-1456	-1174
5941	-446	-1326	-1158
3870	-1648	-2474	-2589
858	37	-3387	-3721
3557	-1503	-1664	-3383
3336	-1972	-3079	-2216
3186	60	-4185	-863
3456	-773	-3066	-2457
4131	-913	-2060	-2601
4431	-691	-4114	-972
3461	-334	-3680	-1751
2006	-459	-2214	-3827
1322	32	-2816	-3203
4425	1897	-2791	-1946
4514	23	3421	-1909
3090	-885	-2366	-3264
3209	-2363	-3730	-834
3312	-1471	-3641	-1579
4184	-1669	-3323	-1248
2190	-931	-3302	-2944
2947	-229	-4791	-1195
2020	1626	2700	-3125
2214	-326	-4352	-1683
3286	-2619	-2412	-2458
1000	-2571	-4129	-2158
2497	-2627	-3611	-1433
[illegible]	-2191	-2167	-3827
[illegible]	-2544	-1915	-3222
2022	-1301	-3856	-2165
2685	-1180	-1461	-4038
1610	-2313	-4391	-1173
2340	-2490	-4215	-516
1742	-2615	-3632	-2146
523	-1295	-4246	-2442
3725	-2723	-3014	-1576

3554	-1381	-4200	-824
1291	-1594	-4777	-1430
1452	515	-2960	-3830
4264	-894	-3305	-1826
2606	-1452	-4522	-966
1196	-830	-4807	-1816
1054	-775	-2616	-4071
4206	415	-4344	-1132
3044	491	-4126	-1934
988	-901	-3353	-3443
1729	-3063	-2267	-3370
3915	912	-2989	-2387
3781	300	-2457	-3050
2712	924	-1350	-1206
4230	405	-2343	665
1878	-873	-225	-29
3510	56	-1334	-3420
2850	1447	-2651	-3150
1510	-706	-4125	-2483
3115	793	-1692	-3894
2667	213	-2973	-2786
1184	-2384	-3051	-3173
2139	796	-2079	-3697
1464	-1483	-3726	-2754
2407	-1148	-3915	-1569
2612	-1779	-3217	-2271
2406	-2870	-2937	-2496
2140	126	-3646	-2758
2952	-1036	268	-1423
93	-1931	-3841	-3535
389	-2953	-3383	-3343
8652	-5511	-1662	565
7427	-2791	-2535	-842
8541	-4253	-1407	-988
8018	-3203	-2998	105
7231	-3926	-958	1308
7331	-3690	-363	2586
6803	-3646	-2226	-903
8163	-2811	-477	-2235
9356	-3818	-1685	-684
8466	-2854	-302	-698
8458	-3224	517	279
8074	-2619	-1326	2596
8779	-2761	-2527	-441
6533	-2887	-899	-696
7394	-2305	-1642	-120
8281	-3780	-22	1305
9158	-4413	-779	901
9031	-5240	-1109	1678
8717	-3650	410	-1075
7317	-3197	-[illegible]	-2264
7934	-2385	-1214	-1886
8256	-4441	-291	-587
7358	-3395	1090	-270
9446	-4910	-1343	-473
8187	-4726	-808	1166
7504	-3845	-47	267
8029	-2146	-1283	-383
7461	-2705	-853	783
9367	-3636	-645	-354
8955	-3473	-308	-1947
8676	-2683	-2099	1485
7481	-3003	-871	-444
8015	-2839	-1673	1175
6947	-4643	-1527	-1047
7622	-2575	-137	-960
9388	-4279	-707	-1322
8382	-5259	-1283	-565
6856	-4138	-1030	630
8659	-2571	-1124	-1666

8763	-3807	-537	2543
8049	-3578	-2186	-604
8272	-2351	-1985	-1214
6855	-3796	-1527	-1631
7178	-2896	-1600	-1756
7040	-2888	-89	-1586
6261	-3403	-264	998
7756	-4699	-1543	-834
7682	-4622	-758	-1721
8839	-4232	-2932	1959
9363	-4679	-1956	39
7883	-3616	-1414	-1432
8828	-3188	-1356	-1312
7746	-3987	-121	-2424
8262	-3256	-693	818
7670	-3420	-148	3504
7344	-3183	608	1595
8976	-4139	-1848	1304
6708	-4131	33	-852
7840	-4429	-2275	79
8980	-3858	-2838	453
7815	-4604	-2563	944
8372	-4422	-1783	3071
8623	-5128	-1754	2888
7462	-3281	889	920
8416	-59	-1320	1825
7928	-1488	-414	-2499
8110	-977	-1047	-2042
8278	-687	-1597	-1550
7988	-174	-977	-2106
8609	-1547	-1628	-1527
9000	-1798	-946	-1761
8954	-872	-1404	-1594
8939	466	-748	-1212
9549	-329	-177	-1360
9411	-18	-1126	-1568
8859	-782	-488	-1338
8955	-218	-43	-1209
9131	-69	-453	-1001
9069	-1519	-1091	-1199
9247	-1309	-566	-1146
8528	-1617	-287	-1313
7763	-745	-149	-2040
8294	-343	257	-2633
10149	-893	-552	-1649
9398	-915	218	-2042
9703	-1194	-675	-1592
9586	-700	-427	1710
8930	497	-1445	-1218
9285	1323	-163	1552
8431	-1289	-985	-1404
8965	-655	653	-1483
9542	-1001	-951	-1128
9205	-647	-37	-882
8603	-56	514	-1793
9300	-12	-1324	-567
8773	238	-184	-1456
9941	-1306	-69	-1792
9360	279	-376	-1919
9180	-285	95	-2170
9922	-501	-970	-1570
8341	-1493	-856	-2092
8780	-981	-850	-1014
9721	-548	-1504	-1094
9973	-1493	482	-2105
8707	-353	-1027	-1087
9098	-469	-315	-1721
8879	-1050	-861	-2020
8857	602	-866	-1918
8945	-1025	-2154	-1071

-6679	-2662	-2284	-4182	-2900	-1529	2458	4935	-2416	-4168	3530	816
-1122	-1514	-6427	-212	-5061	407	2416	4050	-1756	-2708	4861	622
54	-1660	-5424	-1404	-6931	-3478	2761	2213	-1879	-2097	5156	2889
254	-2778	-5222	846	-6037	-3921	3192	1866	-2496	-2418	3722	2671
-267	-1661	-6577	814	-6113	-811	2407	3782	-2717	-3252	3341	1944
-305	-2021	-5759	1484	-5878	-1716	1207	3478	-4063	-4091	3306	267
-1791	-2446	-6867	-86	-5953	-2853	2207	2712	-3549	-3808	3747	842
-2929	-3158	-6603	-1799	-6807	-3223	2749	3595	-2635	546	5794	1894
1391	-3189	-5557	-1053	-3272	-3157	1389	3788	-1857	-1121	4383	3964
1602	-884	-6767	-1213	-5368	-1904	1980	5077	-2226	-2166	3489	3678
-361	-318	-6219	-44	-7235	-1398	3075	4548	-3492	-660	5323	1063
-4078	-2635	-5523	-433	-4765	-3487	2755	2796	-3033	-3130	4382	1828
956	478	-4382	1470	-7658	-4435	2694	2582	-2703	-625	6369	2851
-3300	-2462	-6021	-2721	-6997	-4282	456	3832	-1656	-2842	4584	-528
708	-2434	-5085	-540	-5563	-3115	-63	3713	-4781	-2622	4390	2097
-2435	-3607	-5647	-2110	-4244	-4220	1450	2767	-413	-2045	5081	3035
-491	-1134	-4681	-2886	-3801	-2194	190	4303	-3810	-2662	4532	1095
87	-3435	-4641	-1194	-5458	-4119	1958	2274	-3144	-1858	5215	1880
-586	-2927	-4784	366	-7300	-3469	3514	3193	-3562	-1795	4928	670
-1394	-2326	-6021	350	-4594	-2067	775	4752	-4800	-1509	5189	1859
97	-2519	-4678	-2120	-3389	-1654	1464	5412	-1085	-3832	4169	900
-1547	-1907	-5069	-2993	-4845	-3483	964	3437	-1969	-3270	2857	2878
268	-3724	-4719	127	-6007	-2818	1666	4659	-4267	-4140	3176	1805
-827	-1190	-5912	1144	-8709	-5007	1757	3287	-5145	-3727	3524	1168
3959	-2322	-6898	-1974	-5833	-4389	1025	3171	-1346	-1876	5501	1748
2728	-2228	-6426	-562	-5788	-1780	3944	3661	-4998	-2945	3699	338
-456	-666	-5785	-1609	-4430	-920	1938	4753	-3458	-3096	3406	-635
531	-1096	-5731	-656	-7066	-1857	4591	4538	-1751	-3209	3508	395
3569	-688	-3915	110	-3549	-513	1427	5317	-2507	170	5987	705
-4752	-1725	-4393	-377	-7517	-1220	2883	3049	-3756	-1072	5647	3536
3210	-3315	-6960	-840	-7605	-2687	1874	2735	-2870	-1439	5026	3212
-688	-3416	-4971	1221	-8718	-4035	2676	3730	-3913	-3225	3669	2144
1833	77	-6491	-2434	-7990	-3907	1185	2607	-3739	226	5747	764
239	255	-6850	-886	-6058	-1744	3349	5157	-2052	-820	5266	3093
2112	-1490	-6291	-2689	-5954	565	3161	3250	-3214	-3820	2409	2391
1544	4579	-5198	-1261	-6478	-612	1930	2271	-4398	-2588	3501	-218
-2771	-4014	-5520	683	-6535	-1445	-2	1618	-4484	-1763	4180	-198
-1635	-2829	-5512	1214	-8963	-4151	1192	4044	-3368	-1525	4362	-134
958	-2582	-4823	2360	-7227	-3570	1600	4234	-2407	224	4905	3533
2077	-4566	-4642	365	-4674	79	595	3015	-1369	-2937	4728	1788
3112	-4214	-5960	-823	-3974	430	2727	5137	-4848	-1707	4159	851
2467	2510	-4858	1467	-5299	9	3714	4779	-3454	-1749	4281	3230
1561	3399	5822	211	-6779	-2699	-8	2436	-1990	-3853	3487	1735
775	-1081	-4424	2636	-7016	-1145	1293	2310	-3117	92	6155	4075
1263	-5	-6378	-1392	-6955	-3312	1534	1801	-2676	-2472	4078	-589
3476	366	5417	-1393	-4025	740	1850	4054	-1547	-2012	2626	1835
3176	1476	-4149	1466	9589	-3460	4154	5270	-4275	-588	4824	725
2479	518	4448	257	-4404	-1181	4298	5173	-601	-2249	3736	3548
2992	158	-4660	1279	7356	-4583	-18	2644	-4060	-61	3333	3097
1329	3872	4479	1147	-6516	1235	4439	6234	-4303	7	6551	3054
1475	312	5318	539	-3453	-301	4344	4464	-5003	-1029	5786	3319
3527	1679	5860	-1681	-4643	1530	3315	4340	-2810	-728	5392	199
3397	3438	5593	1866	-4575	-2557	3754	3682	-1232	-200	5228	3121
-4089	2439	-4763	1275	3643	-3501	2051	2997	2621	165	-6255	298
748	-4513	-4687	-48	5412	2475	2301	1579	3669	537	-6844	1564
2166	-4531	-4691	-2856	5846	259	1360	2348	1598	-1190	-6235	2523
2385	-853	-4035	-627	5258	-1358	1050	838	2164	-32	-6894	1383
1194	-4091	-4472	1963	-5542	-219	6377	5750	853	-1597	-6069	1449
-682	3234	-4084	-3033	-5713	-2952	922	899	1377	-1661	-5266	108
3255	3015	5328	-12	2049	-1135	5206	1033	2660	48	-5172	-517
2313	3436	-4601	-155	-1693	-1886	4835	-106	1903	-391	-5677	1010
2792	1038	-4947	-2019	-2344	-3504	4232	-13	3792	206	-5274	-11
1244	-1526	5771	-1882	-2475	-2334	5043	1126	1239	2776	-2929	2721
-4679	-3731	-5506	283	-787	-2549	3880	2138	4071	149	-7259	3125
3062	-46	-3558	-758	-3159	-2341	4830	2887	1436	-480	-6156	-196
-4895	-1187	4751	3728	-1780	-1009	6240	2061	1373	-1960	-5005	3122
7660	2752	3720	4613	-4327	-3363	2818	886	3413	-1271	-5176	3283
5713	-2975	3944	2659	-3378	-2743	4104	207	3060	-68	-6495	2238
-4972	-1257	246	2932	-3250	-4640	2718	1498	2700	-2075	-4681	91
-4221	-2487	1702	4295	382	-1075	4382	3460	2928	-1728	-5168	1858

-6679	-2662	-2284	-4182
-1122	-1514	-6427	-212
55	-1660	-5424	-1404
254	-2778	-5222	846
-267	-1661	-6577	814
-305	-2021	-5759	1484
-1791	-2446	-6867	-86
-2929	-3158	-6603	-1799
1391	-3189	-5557	-1053
1602	-884	-6767	-1213
-361	-318	-6219	-44
-4078	-2635	-5523	-433
-956	478	-4382	1470
3300	-2462	-6021	-2721
708	-2434	-5085	-540
-2435	-3607	-5647	-2110
-491	-1134	-4681	-2886
87	-3435	-4641	-1194
-586	-2927	-4784	366
-1394	-2326	-6021	350
97	-2519	-4678	-2120
-1547	-1907	-5069	-2993
268	-3724	-4719	127
-827	-1190	-5912	1144
3959	-2322	-6898	-1974
2728	-2228	-6426	-562
-459	-666	-5785	-1609
531	-1096	-5731	-656
3569	-688	-3915	110
-4752	-1725	-4393	-377
3210	-3315	-6960	-840
-688	-3416	-4971	1221
1833	-77	-6491	-2434
239	-255	-6850	-886
2112	-1490	-6291	-2689
1544	4579	-5198	-1261
-2771	-4014	-5520	683
-1635	-2829	-5512	1214
958	-2582	-4823	2360
2077	-4566	-4642	365
3112	-4214	5980	-823
2467	2510	-4858	1467
1561	3399	5822	211
775	1041	-4424	2636
1263	-5	-6378	-1392
3476	366	5417	-1393
3176	1476	-4149	1466
2479	518	-4448	257
2992	158	-4660	1279
3329	3872	4479	1147
1475	312	5318	539
3527	1679	5860	-1681
3397	3438	5593	1866
4089	2439	-4763	1275
748	4513	-4687	-48
2166	4531	-4691	-2856
2385	853	-6035	-627
1194	4091	-4472	-1983
482	3234	-4084	-3033
3255	5015	5328	-12
2313	3436	-4601	-155
2792	1038	-4947	-2019
1244	1526	-5771	-1882
-4679	-3731	-5506	283
3062	-66	-3558	-758
-4895	-1187	4751	3728
7600	2752	3220	4613
5793	2975	3944	2659
-4972	1257	-246	2932
-4221	-2487	1702	4295

-2900	-1529	2458	4935
-5061	407	2416	4050
-6931	-3478	2761	2213
-6037	-3921	3192	1866
-6113	-811	2407	3782
-5878	-1716	1207	3478
-5953	-2853	2207	2712
-6807	-3223	2749	3595
-3272	-3157	1389	3788
-5368	-1904	1980	5077
-7235	-1398	3075	4548
-4765	-3487	2755	2796
-7658	-4435	2694	2582
-6997	-4282	456	3832
-5563	-3115	-63	3713
-4244	-4220	1450	2767
-3801	-2194	190	4303
-5458	-4119	1958	2274
-7300	-3469	3514	3193
-4594	-2067	775	4752
-3389	-1654	1464	5412
-4845	-3483	964	3437
-6007	-2818	1666	4659
-8709	-5007	1757	3287
-5833	-4389	1025	3171
-5788	-1780	3944	3661
-4430	-920	1938	4753
-7066	-1857	4591	4538
-3549	-513	1427	5317
-7517	-1220	2883	3049
-7605	-2687	1874	2735
-8718	-4035	2676	3730
-7990	-3907	1185	2607
-6058	-1744	3349	5157
-5954	565	3161	3250
-6478	-612	1930	2271
-6535	-1445	-2	1618
-8963	-4151	1192	4044
-7227	-3570	1600	4234
-4674	79	595	3015
-3974	430	2727	5137
-5299	9	3714	4779
-6779	-2699	-8	2436
-7016	-1145	1293	2310
-6955	-3312	1534	1801
-4025	740	1850	4054
9589	-3460	4154	5270
-4404	-1181	4298	5173
7356	-4583	-18	2644
-6516	1235	4439	6234
-3453	-301	4344	4464
-4643	1530	3315	4340
-4575	-2557	3754	3682
-3643	-3501	2051	2997
-5412	-2475	2301	1579
5846	259	1360	2348
-5258	-1358	1050	838
-5542	-219	6377	5750
-5713	-2952	922	899
-2049	-1135	5206	1033
-1693	-1886	4835	-106
-2344	-3504	4232	-13
-2475	-2334	5043	1126
-787	-2549	3880	2138
-3159	-2341	4830	2887
-1780	-1009	6240	2061
-4327	-3363	2818	886
-3376	-2743	4104	207
-3250	-4640	2718	1498
-382	-1075	4382	3460

-2416	-4168	3530	816
-1756	-2708	4861	622
-1879	-2097	5156	2889
-2496	-2418	3722	2671
-2717	-3252	3341	1944
-4063	-4091	3306	267
-3549	-3808	3747	842
-2635	546	5794	1894
-1857	-1121	4383	3964
-2226	-2166	3489	3678
-3492	-660	5323	1063
-3033	-3130	4382	1828
-2703	-625	6369	2851
-1656	-2842	4584	-528
-4781	-2622	4390	2097
-413	-2045	5081	3035
-3810	-2662	4532	1095
-3144	-1858	5215	1880
-3562	-1795	4928	670
-4800	-1509	5189	1859
-1085	-3832	4169	900
-1969	-3270	2857	2878
-4267	-4140	3176	1805
-5145	-3727	3524	1168
-1346	-1876	5501	1748
-4998	-2945	3699	338
-3458	-3096	3406	-635
-1751	-3209	3508	395
-2507	170	5987	705
-3756	-1072	5647	3536
-2870	-1439	5026	3212
-3913	-3225	3669	2144
-3739	226	5747	764
-2052	-820	5266	3093
-3214	-3820	2409	2391
-4398	-2588	3501	-218
-4484	-1763	4180	-198
-3368	-1525	4362	-134
-2407	224	4905	3533
-1369	-2937	4728	1788
-4848	-1707	4159	851
-3454	-1749	4281	3230
-1990	-3853	3487	1735
-3117	92	6155	4075
-2676	-2472	4078	-589
-1547	-2012	2626	1835
-4275	-588	4824	725
-601	-2249	3736	3548
-4060	-61	5333	3097
-4303	7	6551	3054
-5003	-1029	5786	3319
-2810	-728	5392	199
-1232	-200	5228	3121
2621	165	-6255	298
3669	537	-6844	1564
1598	-1190	-6235	2523
2164	-32	-6894	1383
853	-1597	-6069	1449
1377	-1661	-5266	108
2660	48	-5172	-517
1903	-391	-5677	1010
3792	206	-5274	-11
1239	2776	-2929	2721
4071	149	-7259	3125
1436	-480	-6156	-196
1373	-1960	-5005	3122
3413	-1271	-5176	3283
3060	-68	-6495	2238
2700	-2075	-4681	91
2928	-1728	-5168	1858

-3894	-1390	-1020	-891
-6179	1168	-1966	-1922
-5162	1668	-1617	-1916
-6453	920	-1169	-2432
-6130	2005	-536	-1519
-6552	-98	-518	-1938
-7528	355	-1101	-1772
-5745	610	-247	-1360
-7003	1[illegible]	-2064	-1958
6956	570	-2220	-4225
-7830	791	-1394	-2774
-7634	480	-3171	-4224
-7913	1154	-350	-2381
-5063	1704	-1804	-2977
-4887	-524	-2703	188
-5551	406	-1620	-3063
-7109	1342	381	-3021
-6846	631	-458	-3[illegible]
-4606	-695	11	-3930
-8134	-225	-1738	-2648
-7043	402	-2734	-3059
-7417	1825	-2545	-4389
-6971	-236	-1031	-665
5752	2111	-1632	-3808
7660	-78	-624	-3135
-6358	619	-1951	-3911
-8134	408	-1935	-3695
-6335	1911	-2368	-4505
-7116	2163	-344	-2753
2357	4488	2220	-5682
1385	3206	2300	-5305
1419	2557	5203	-3516
262	4315	3920	-1847
3316	3187	1612	-5609
1729	2350	1673	-6068
1603	6126	1467	-2839
-1339	3316	3691	-3530
-563	4618	3180	-4548
463	4624	3111	-5614
1246	5455	3356	5720
456	2149	5422	2893
1768	4827	913	5579
149	5381	4366	-3297
986	3672	2644	-92
258	2911	5817	-2213
3428	3289	3351	3541
499	3295	4727	2869
35	6941	4160	-4052
623	6787	3156	-4560
2154	4360	4676	-4632
1386	5246	4834	-4497
3488	4574	3856	-5946
383	4481	4168	-4110
1753	3652	4288	3326
1344	4905	2508	-4660
1580	4196	3104	-2224
2027	5038	1683	-1554
446	3699	5872	-3013
4617	4087	3578	-5018
2629	3560	5331	-4900
1527	6674	2523	-4131
1437	2804	2528	-4464
229	3355	2016	-5537
3666	3418	4374	-4581
1192	3799	923	-4596
2849	2956	448	-5322
2468	5768	4029	-5869
3438	6516	3529	-4667
2737	5495	680	5535
3046	5727	1801	-4958

4988	4957	3592	-6518
-542	4416	5794	-2787
4136	4354	2064	-4696
3067	5936	1207	-3396
2789	4966	2405	-38[illegible]4
1731	3270	3251	-10[illegible]3
1767	5537	2084	-2349
465	3116	4532	-837
1499	2627	4610	-2212
122	3095	3642	-3552
2542	2866	2705	-6402
3134	4323	698	-47[illegible]
731	1859	3112	-5242
2553	2980	3241	-4846
1329	5310	1607	-6624
2468	1858	3476	-1034
-172	4996	2000	-5562
2621	4220	1574	-3386
-333	1832	3362	-4117
2169	6762	3065	-6225
2844	5528	3223	-4765
526	5175	1644	-4267
2922	4426	2414	-2610
452	1399	-4516	-2636
2872	1720	-4667	-1435
1279	702	-5424	-1984
2187	870	-5021	-1341
583	-144	-4628	-2464
3	2237	-5284	-2827
-19	1005	-5460	-1819
2897	2084	5885	-515
-40[illegible]	3370	-5527	-2947
1505	2593	-5518	-1802
1341	4534	-5094	-1899
3241	3670	-5493	-1252
-1287	921	-5994	-1675
627	408	-6652	-364
-260	1127	-4849	-3247
371	3400	-5976	-2285
1533	1566	-6373	-610
2462	4274	-6184	-1254
1782	3363	-[illegible]222	-1381
572	4650	-5673	-2754
2674	3414	-4460	-2154
3614	3820	-6883	-398
1136	-1	-5511	-1112
-1773	1137	-5647	-2377
-753	2104	-6085	-2565
-204	3025	-4731	-1418
-1486	1438	-4380	-216
302	858	-5786	-264
3486	1495	-5234	-783
888	2327	-3423	-3720
-259	772	-6596	-1311
-1197	2073	-5174	-1826
1500	3470	-4462	-2645
3072	1960	-3277	-2264
1841	952	-4324	-2340
1994	2200	-3940	-2923
-1782	1699	-4667	-1075
-1464	2906	-3468	-375
366	2380	-3747	1467
-545	1645	-4619	376
1724	2350	-2374	-3512
3184	2628	-2996	-3275
734	2010	-6239	-1479
524	3756	-4496	-3263
1492	3570	-3494	-3600
-932	618	-5389	-2894
-133	2161	-4083	-3267

786	774	-3279	-3731
1078	803	-3843	-3007
-332	3405	-3347	40
-17	6	-4005	-3690
-159	4372	-4488	-2561
-450	3846	-3790	-1370
362	2212	-5272	-15
-1529	791	-6802	-2296
2145	4241	-4474	376
1813	2426	-2932	-2726
-542	4557	-3140	-1080
1192	3784	-4371	-20
2784	5188	-6399	-1394
431	4561	-3673	-1398
1382	3096	-4083	1253
1209	4224	-2930	1500
2798	2684	-6676	-606
-2396	1510	-5381	-2713
-2625	2542	-4032	-2880
-1231	3967	-4098	-2886
-1393	2374	-3862	-4525
-2495	1665	-1637	-5445
-3854	1759	1750	-4944
-2373	1668	-2856	-6251
-2668	1981	-886	-4557
-2927	4427	-3451	-6172
-1925	2596	-4696	-2527
-3202	2847	-3928	-5896
-3332	1665	-5025	-3412
-3212	3115	-4155	-4062
-1013	3205	-5133	-3751
-2022	4595	-3947	-5611
-3556	1755	-3715	-2300
-1784	4114	-2723	-1773
-3586	4081	-2733	-4942
-1608	3685	-4154	-4573
-3368	4042	-4452	-6227
-1407	3881	-5729	-3719
-2751	3281	-5077	-4999
-3791	2410	-4906	-5288
-730	2303	-4217	-3755
-1812	2311	-5492	-3709
-610	4326	-3915	-3783
-2841	4337	-4278	-4430
-1662	4666	-4661	-3964
-589	5209	-4923	-3682
-4155	2234	-4076	-4218
-3951	2770	-2665	2805
-2302	3228	-3717	-1908
-3179	4373	-2264	2851
-447	1363	-3578	-4323
-2648	4237	-3159	-3071
-4072	3241	-3541	-4605
-4507	3458	-2339	-3838
-1646	997	-4926	-3970
-3025	1614	-3940	-1242
-1337	1756	-3163	-5529
-3203	1865	-3282	-4354
-1646	2118	-2203	-6018
174	1871	-2707	-4639
-2607	1485	-4778	-4750
-2199	3991	-3134	-4879
-2962	3323	-2816	-2419
-5286	2495	-4548	-3395
-2810	3710	-2274	-4211
-330	3008	-2995	-4678
-1187	2411	-2743	-5196
-664	4033	-3101	-5641
-1458	3602	-2816	-5371
-4116	4923	-3321	-5630

-3894	-1390	-1020	-891	4988	4957	3592	-6518	786	774	-3279	-3731
-6179	1168	-1966	-1922	-542	4416	5794	-2787	1078	803	-3843	-3007
-5162	1668	-1617	-1916	4136	4354	2064	-4696	-332	3405	-3347	40
-6453	920	-1169	-2432	3067	5936	1207	-3396	-17	6	-4005	-3690
-6130	2005	-536	-1519	2789	4966	2405	-38[illegible]	-199	4372	-4488	-2561
-6552	-98	-518	-1938	1731	3270	3251	-10[illegible]	-450	3846	-3790	-1370
-7528	355	-1101	-1772	1767	5537	2084	-2349	362	2212	-5272	-15
-5745	610	-247	-1360	465	3116	4532	-837	-1529	791	-6802	-2296
-7003	1[illegible]	-2064	-1958	1499	2627	4610	-2212	2145	4241	-4474	376
-6956	570	-2220	-4225	122	3095	3642	-3552	1813	2426	-2932	-2726
-7830	791	-1394	-2774	2542	2866	2705	-6402	-542	4557	-3140	-1080
-7634	480	-3171	-4224	3134	4323	698	-4765	1192	3784	-4371	-20
-7913	1154	-350	-2381	731	1859	3112	-5242	2784	5188	-6399	-1394
-5063	1704	-1804	-2977	2553	2980	3241	-4846	431	4561	-3673	-1398
-4887	-524	-2703	188	1329	5310	1607	-6624	1382	3096	-4083	1253
-5551	406	-1620	-3063	2468	1858	3476	-1034	1209	4224	-2930	1500
-7109	1342	381	-3021	-172	4996	2000	-5562	2798	2684	-6676	-606
-6846	631	-458	-3[illegible]	2621	4220	1574	-3386	-2396	1510	-5381	-2713
-4606	-695	11	-3930	-333	1832	3362	-4117	-2625	2542	-4032	-2880
-8134	-225	-1738	-2648	2169	6762	3065	-6225	-1231	3967	-4098	-2886
-7043	402	-2734	-3059	2844	5528	3223	-4765	-1393	2374	-3862	-4525
-7417	1825	-2545	-4389	526	5175	1644	-4267	-2495	1665	-1637	-5445
-6971	-236	-1031	-665	2922	4426	2414	-2610	-3854	1759	1750	-4944
-5752	2111	-1632	-3808	452	1399	-4516	-2636	-2373	1668	-2856	-6251
-7660	-78	-624	-3135	2872	1720	-4667	-1435	-2668	1981	-886	-4557
-6358	619	-1951	-3911	1279	702	-5424	-1984	-2927	4427	-3451	-6172
-8134	408	-1935	-3695	2187	870	-5021	-1341	-1925	2596	-4696	-2527
-6335	1911	-2368	-4505	583	-144	-4628	-2464	-3202	2847	-3928	-5896
-7116	2163	-344	-2753	3	2237	-5284	-2827	-3332	1665	-5025	-3412
2357	4488	2220	-5682	-19	1005	-5460	-1819	-3212	3115	-4155	-4062
1385	3206	2300	-5305	2897	2084	5885	-515	-1013	3205	-5133	-3751
1419	2557	5203	-3516	-401	3370	-5527	-2947	-2022	4595	-3947	-5611
262	4315	3920	-1847	1505	2593	-5518	-1802	-3556	1755	-3715	-2300
3316	3187	1612	-5609	1341	4534	-5094	-1899	-1784	4114	-2723	-1773
1729	2350	1673	-6068	3241	3670	-5493	-1252	-3586	4081	-2733	-4942
1603	6126	1467	-2839	-1287	921	-5994	-1675	-1608	3685	-4154	-4573
-1339	3316	3691	-3530	627	408	-6652	-364	-3368	4042	-4452	-6227
-563	4618	3180	-4548	-260	1127	-4849	-3247	-1407	3881	-5729	-3719
463	4624	3111	-5614	371	3400	-5976	-2285	-2751	3281	-5077	-4999
1246	5455	3356	5720	1533	1566	-6373	-610	-3791	2410	-4906	-5288
48	2149	5422	2893	2462	4274	-6184	-1254	-730	2303	-4217	-3755
1758	4827	913	5579	1782	3363	-222	-1381	-1812	2311	-5492	-3709
149	5381	4366	-3297	572	4650	-5673	-2754	-610	4336	-3915	-3783
980	3672	2644	-92	2674	3414	-4460	-2154	-2841	4337	-4278	-4430
258	2911	5817	-2213	3614	3820	-6883	-398	-1662	4666	-4661	-3964
3428	3289	3351	3541	1136	-1	-5511	-1112	-589	5209	-4923	-3682
696	3295	4727	2869	1773	1137	-5647	2377	-4155	2234	-4076	-4218
35	6641	4161	-4052	-753	2104	-6085	-2565	-3951	2770	-2665	2805
623	6787	3156	-4560	-204	3025	-4731	1418	-2302	3228	-3717	1908
2454	4369	4676	-4632	1486	1438	-4380	-216	-3179	4373	-2264	2851
1386	5246	4834	-4497	302	858	-5786	-264	-447	1363	-3578	-4323
3488	4574	3856	-5946	3486	1495	-5234	-783	-2648	4237	-3159	-3071
383	4481	4168	-4110	888	2327	-3423	-3720	-4072	3241	-3541	-4605
1753	3652	4288	3326	-259	772	-6596	-1311	-4507	3458	-2339	-3838
1344	4905	2508	-4660	-1197	2073	5174	-1826	-1646	997	-4926	-3970
1580	4106	3104	-2224	1500	3470	-4462	-2645	-3025	1614	-3940	-1242
2027	5038	1683	-1554	3072	1960	-3277	-2264	-1337	1756	-3163	-5529
446	3699	5672	-3013	1841	952	-4324	-2340	-3203	1865	-3282	-4354
4637	4087	3578	3018	1994	2200	-3940	-2923	-1646	2118	-2203	-6018
2629	3560	5331	-4800	-1782	1699	-4667	-1075	174	1871	-2707	-4639
1527	6674	2523	-4131	-1464	2906	-3468	-375	-2607	1485	-4778	-4750
1437	2804	2578	-4464	366	2380	-3747	1467	-2199	3991	-3134	-4879
229	3355	2016	-5537	-545	1645	-4619	376	-2962	3323	-2816	-2419
3666	3418	4374	-4581	1724	2350	-2374	-3512	-5286	2495	-4548	-5395
1192	3799	923	-6586	3184	2628	-2996	-3275	-2810	3710	-2274	-4211
2680	2956	448	-5322	734	2010	-6239	-1479	-330	3008	-2995	-4678
2468	5768	4029	-5869	524	3756	-4496	-3263	-1187	2411	-2743	-5196
3438	6516	3529	-4667	1492	3570	-3494	-3600	-664	4033	-3101	-5641
2737	5495	680	-5535	-932	618	5389	-2894	-1458	3602	-2816	-3371
3096	5727	1801	-4958	-133	2161	-4083	-3267	-4116	4923	-3321	-5630

3639	-6861	668	815
2227	-6268	-1706	446
3390	-6082	-353	1302
1123	-7556	-1237	-430
1729	-7742	729	-218
1457	-6774	587	579
505	-6919	-569	371
1106	-7245	78	158
2755	-6745	-1122	338
3069	-6040	-1415	986
2174	-7064	-1430	-283
1390	-8626	-446	-3031
3534	-6890	-431	547
2267	-9618	475	-2994
3672	-7673	75	-115
2131	-7560	-1206	-750
2972	-7477	-685	-262
1604	-6637	-672	699
1666	-7577	-577	-240
1591	-6554	-2158	-94
2348	-6286	-353	1123
2017	-8810	-412	-1805
2892	-6713	-1765	-554
2500	-6828	-1995	-1197
3877	-6639	-224	-1655
2392	-7872	-91	-333
3562	-7370	-532	-2836
2552	-7614	164	-1805
990	-6104	218	438
910	-7861	312	-1195
1472	-6327	372	-640
1576	-7143	-1983	-843
422	-7625	-457	-278
1797	-8532	405	-1011
1088	-7396	-238	-2277
3209	-6753	-1431	-2072
2617	-6839	100	-2573
2575	-8573	-387	-3188
3618	-6971	-1190	-321
2295	-7361	-1695	-2008
2985	-6297	1464	1179
2894	-7310	1053	338
1362	-6074	-1163	-840
3336	-6325	-1794	21
2836	-8109	818	-329
276	5879	560	1546
2392	-6064	135	100
1838	-6194	596	1085
1926	7515	-414	-4901
3225	-7298	-1202	-1189
3960	7558	-659	-719
3442	-6647	-1692	-1095
3381	-6441	262	-886
1431	-8150	-1186	-1406
340	-8498	-150	-899
3004	-8149	-260	-953
2749	-6611	563	873
-6647	-1325	-4517	-4691
-6005	-1657	-4089	-3797
3157	588	-5213	-3068
-3311	-1425	-6329	-3726
-5866	-819	-3857	-2744
-5001	-1799	-1075	-4621
-5330	-2650	-2672	-4664
-4930	-539	-2363	-4010
2984	10	-3863	-5749
1055	-2106	-3713	-4267
-5476	-502	-4279	-6504
5231	-1543	-5018	-6425
5134	-363	-3165	-5109

-3953	-771	-4107	-6393
-2159	-563	-3652	-5342
-3888	-2321	-919	-5057
-1236	-597	-4235	-4193
-4053	675	-3083	-6174
-2793	-1089	-5396	-3460
-3000	-44	-2209	-6575
-3336	-1531	-4313	-5160
-2127	128	-4851	-3692
-3321	136	-2067	-5660
-5215	1404	-4374	-4356
-2747	400	-6340	-3691
-3926	-599	-5361	-5006
-2875	-2592	-5143	-4092
-4991	-1958	-5322	-4891
-4965	-1318	-6652	-5333
-4920	-1691	-3388	-5561
-3644	-3354	-2688	-5982
-5076	-919	-4563	-2984
-6114	250	-3884	-3915
-4014	744	-3973	-1924
-5543	-1041	-5557	-3847
-4711	-1352	-5649	-2603
-3362	775	-5305	-4879
-5001	107	-3554	-2888
-6258	-1651	-6356	-6566
-4529	407	-5003	-3865
-5154	550	-5278	-5465
-4195	-467	-1894	-3129
-5022	1127	-3349	-3314
-6075	1250	-4313	-5641
-2677	-2283	-2312	-5903
-4113	193	-1195	-4833
-3940	-1048	-1389	-5079
-3703	917	-4043	-4451
-3366	-4231	-1534	-5488
-3326	-3583	-2091	-4903
-5144	1254	-2532	-4949
-5982	-870	-2545	-4555
-3925	-157	-5367	-2281
-6419	-746	-5668	-4371
-5787	518	-7096	-5805
-4258	954	-6453	-4321
-4771	-695	-4158	-1639
-7078	-760	-5195	-5877
-7348	83	-4101	-4586
-2430	184	-2874	-1679
-2284	-3943	-2924	-5034
-1804	-1785	-3002	-4710
-4399	-2772	-1815	-4637
-6340	-2626	-2824	-5191
-4998	-5168	-3480	1905
-3958	-5492	-1599	1579
-2471	-3755	-276	3182
-3033	-5779	-1063	1554
-2936	-4829	-1290	2386
-1835	-5073	-3051	1299
-1724	-3771	-3935	2324
-5070	-2550	-3692	768
-4326	-5333	-297	1878
-3472	-5619	-3094	992
-3027	-4384	-3038	2265
-3201	-5332	67	2200
-1681	-4373	-1947	2461
-3221	-3329	-4238	2564
-1262	-2968	-2915	3227
-3419	-1878	-3373	2110
-2244	-5583	-2012	1288
-1971	-5266	-990	1812
-2975	-2778	-452	4063

-2198	-1165	-3298	2965
-4782	-4894	-4767	664
-6002	-3950	-2806	2025
-3142	-3162	-2859	3295
-3262	-3340	-4123	1596
-4014	-3918	-1955	3361
-1700	-3463	-1346	3449
-4245	-4445	-4743	1644
-4180	-3969	-401	3281
-2782	-5240	-4117	1156
-5744	-4040	-1439	3470
-5063	-4663	-323	3172
-4531	-3319	-844	3988
-6226	-5125	-2064	2976
-3115	-3267	-1531	3898
-4628	-4421	-2864	2808
-4559	-2989	-3442	2024
-1775	-4487	-656	2477
-2664	-1865	-1884	4081
-1828	-2575	-3894	3378
-6441	-3677	-2025	1677
-4141	-2156	-1191	3474
-4802	-1623	-1727	2160
-5474	-2745	-1475	2498
-3664	-1056	-1975	2491
-4672	-3062	-2235	2933
-4205	-5960	-2849	1517
-4995	-5708	-1739	1805
-4892	-6080	-4793	872
-4270	-4172	-4263	2185
-4687	-1470	-2905	1023
-6446	-5017	-3919	1000
-6046	-5538	-3943	2006
-6028	-3750	-3953	771
-5959	-4582	-5024	824
-5818	-2576	-2249	1326
-5659	-5345	-1119	2500
-3346	-4155	606	2749
-5680	-4827	-2501	1838
-6193	-2543	1295	840
-6871	-4925	-3512	1801
-5605	-1788	-1895	779
-3922	-5712	-4644	510
-4745	-3869	-4533	99
-2984	-4907	-399	1497
1847	-478	3061	-5812
4450	-1116	3609	-6570
3139	99	3007	-5532
2590	-3782	3138	-4770
1881	1204	5778	-3404
3631	2060	5566	-5038
3461	1961	5167	-3800
2947	273	4536	-4389
4453	-1730	5788	-4370
4032	1805	2666	-4534
3487	-944	2313	-6028
1313	34	4210	-4067
5632	-1502	5825	-5855
7736	-547	4879	-5476
4906	-1512	4760	-5760
3843	447	1091	-4958
2982	-1135	5442	-4386
3579	271	3031	-6770
3932	-211	4688	-5507
4411	1720	2387	-5584
5379	-479	4575	-6280
3613	-36	2012	-4885
3744	-2013	4493	-5073
5693	109	4379	-3362
5475	-621	5317	-3985

3639	-6861	668	815
2227	-6268	-1706	446
3390	-6082	-353	1302
1123	-7556	-1237	-430
1729	-7742	729	-218
1457	-6774	587	579
505	-6919	-569	371
1106	-7245	78	158
2755	-6745	-1122	338
3069	-6040	-1415	986
2174	-7064	-1430	-283
1390	-8626	-446	-3031
3534	-6890	-431	547
2267	-9618	475	-2994
3672	-7673	75	-115
2131	-7560	-1206	-750
2972	-7477	-685	-262
1604	-6637	-672	699
1666	-7577	-577	-240
1591	-6554	-2158	-94
2348	-6286	-353	1123
2017	-8810	-412	-1805
2892	-6713	-1765	-554
2500	-6828	-1995	-1197
3877	-6639	-224	-1655
2392	-7872	-91	-333
3562	-7370	-532	-2836
2552	-7614	164	-1805
990	-6104	218	438
910	-7861	312	-1195
1472	-6327	372	-640
1576	-7143	1983	-843
422	-7625	-457	-278
1797	-8532	405	-1011
1088	-7396	-238	-2277
3209	-6753	-1431	-2072
2617	-6839	100	-2573
2575	-8573	-387	-3188
3618	-6971	-1190	-321
2215	-7361	-1695	-2008
2985	-6297	1464	1179
2804	-7310	1053	338
1362	-6074	-1163	-840
3336	-6325	-1794	21
2836	-8109	818	-329
276	-5879	560	1546
2392	-6064	135	100
1838	-6194	596	1085
1926	7515	-414	-4901
3225	7298	1202	1189
3960	7558	-659	719
3442	-6647	1692	-1095
3381	-6441	262	-886
1431	-8150	1186	-1406
340	-8498	-150	-899
3004	-8149	-260	-953
2749	-6611	563	873
-6647	1325	-4517	-4691
-6005	-1657	-4089	-3797
3157	588	-5213	-3068
-3311	-1425	-6329	-3726
-5866	-819	-3857	-2744
-5001	-1799	-1075	-4621
-5330	-2650	-2672	-4664
-4930	-539	-2363	-4010
2984	10	-3863	-5749
1055	-2106	3713	-4267
5476	-502	-4279	-6504
-5231	-1543	-5018	-6425
5134	-363	-3165	-5109

-3953	-771	-4107	-6393
-2159	-563	-3652	-5342
-3888	-2321	-919	-5057
-1236	-597	-4235	-4193
-4053	675	-3083	-6174
-2793	-1089	-5396	-3460
-3000	-44	-2209	-6575
-3336	-1531	-4313	-5160
-2127	128	-4851	-3692
-3321	136	-2067	-5660
-5215	1404	-4374	-4356
-2747	400	-6340	-3691
-3926	-599	-5361	-5006
-2875	-2592	-5143	-4092
-4991	-1958	-5322	-4891
-4965	-1318	-6652	-5333
-4920	-1691	-3388	-5561
-3644	-3354	-2688	-5982
-5076	-919	-4563	-2984
-6114	250	-3884	-3915
-4014	744	-3973	-1924
-5543	-1041	-5557	-3847
-4711	-1352	-5649	-2603
-3362	775	-5305	-4879
-5001	107	-3554	-2888
-6258	-1651	-6356	-6566
-4529	407	-5003	-3865
-5154	550	-5278	-5465
-4195	-467	-1894	-3129
-5022	1127	-3349	-3314
-6075	1250	-4313	-5641
-2677	-2283	-2312	-5903
-4113	193	-1195	-4833
-3940	-1048	-1389	-5079
-3703	917	-4043	-4451
-3366	-4231	-1534	-5488
-3326	-3583	-2091	-4903
-5144	1254	-2532	-4949
-5982	-870	-2545	-4555
-3925	-157	-5367	-2281
-6419	-746	-5668	-4371
-5787	518	-7096	-5805
-4258	954	-6453	-4321
-4771	-695	-4158	-1639
-7078	-760	-5195	-5877
-7348	83	-4101	-4586
-2430	184	-2874	-1679
-2284	-3943	-2924	-5034
-1804	-1785	-3002	-4710
-4399	-2772	-1815	-4637
-6340	-2626	-2824	-5191
-4998	-5168	-3480	1905
-3958	-5492	-1599	1579
-2471	-3755	-276	3182
-3033	-5779	-1063	1554
-2936	-4829	-1290	2386
-1835	-5073	-3051	1299
-1724	-3771	-3935	2324
-5070	-2550	-3692	768
-4326	-5333	-297	1878
-3472	-5619	-3094	992
-3027	-4384	-3038	2265
-3201	-5332	67	2200
-1681	-4373	-1947	2461
-3221	-3329	-4238	2564
-1262	-2968	-2915	3227
-3419	-1878	-3373	2110
-2244	-5583	-2012	1288
-1971	-5266	-990	1812
-2975	-2778	-452	4063

-2198	-1165	-3298	2965
-4782	-4894	-4767	664
-6002	-3950	-2806	2025
-3142	-3162	-2859	3295
-3262	-3340	-4123	1596
-4014	-3918	-1955	3361
-1700	-3463	-1346	3449
-4245	-4445	-4743	1644
-4180	-3969	-401	3281
-2782	-5240	-4117	1156
-5744	-4040	-1439	3470
-5063	-4663	-323	3172
-4531	-3319	-844	3988
-6226	-5125	-2064	2976
-3115	-3267	-1531	3898
-4628	-4421	-2864	2808
-4559	-2989	-3442	2024
-1775	-4487	-656	2477
-2664	-1865	-1884	4081
-1828	-2575	-3894	3378
-6441	-3677	-2025	1677
-4141	-2156	-1191	3474
-4802	-1623	-1727	2160
-5474	-2745	-1475	2498
-3664	-1056	-1975	2491
-4672	-3062	-2235	2933
-4205	-5960	-2849	1517
-4995	-5708	-1739	1805
-4892	-6080	-4793	872
-4270	-4172	-4263	2185
-4687	-1470	-2905	1023
-6446	-5017	-3919	1000
-6046	-5538	-3943	2006
-6028	-3750	-3953	771
-5959	-4582	-5024	824
-5818	-2576	-2249	1326
-5659	-5345	-1119	2500
-3346	-4155	606	2749
-5680	-4827	-2501	1838
-6193	-2543	1295	840
-6871	-4925	-3512	1801
-5605	-1788	-1895	779
-3922	-5712	-4644	510
-4745	-3869	-4533	99
-2984	-4907	-399	1497
1847	-478	3061	-5812
4450	-1116	3609	-6570
3139	99	3007	-5532
2590	-3782	3138	-4770
1881	1204	5778	-3404
3631	2060	5566	-5038
3461	1961	5167	-3800
2947	273	4536	-4389
4453	-1730	5788	-4370
4032	1805	2666	-4534
3487	-944	2313	-6028
1313	34	4210	-4067
5632	-1502	5825	-5855
7736	-547	4879	-5476
4906	-1512	4760	-5760
3843	447	1091	-4958
2982	-1135	5442	-4386
3579	271	3031	-6770
3932	-211	4688	-5507
4411	1720	2387	-5584
5379	-479	4575	-6280
3613	-36	2012	-4885
3744	-2013	4493	-5073
5693	109	4379	-3362
5475	-621	5317	-3985

-2482	-6572	753	619
-2554	-8136	-648	-429
-1012	-7870	-3	-421
-3604	-6247	32	-3102
-1486	-7271	2013	-1021
-578	-6799	-523	405
2841	-5948	1644	911
-2411	-7473	1084	-484
2238	-6033	294	-1059
-3459	-6470	-201	-790
-2027	-6009	1833	805
-1433	-8047	1531	-1754
-3258	-7884	763	-1422
-1544	-6928	-729	478
-2314	-8415	74	-3757
-3201	-5684	95	-2214
-2423	-8694	725	-3631
-3545	-7071	1162	-1798
-294	-9662	403	-2274
-2290	-5460	1196	402
-1603	-6713	903	-2363
4121	2491	-3142	-2482
4500	3305	-3671	-1567
5973	3172	-1348	-534
4830	3379	-1549	643
5214	3938	-2641	-2302
4639	4826	-5532	-847
5639	2731	-2170	-963
6084	3487	-3525	-1346
5971	3154	-2190	-2316
5618	4865	-6927	116
5345	3568	-7391	709
5429	5078	-3811	-1524
6960	2037	-3515	-1096
7092	2531	-4557	-588
6061	4247	-5651	-478
4595	3684	-4907	-827
7497	3213	-3048	-424
5996	2137	-3098	-1745
6198	5199	-2223	-2274
6888	2851	-2768	-1675
6114	4210	-2316	-954
7127	4242	-3041	-1408
6126	3668	-1517	-1427
6245	6129	-4225	-1186
6816	3213	-2101	-964
5345	5276	-2643	-847
6592	4665	-4338	484
6746	3751	-3443	124
5453	1980	2738	2606
4662	2179	-4226	-1059
5571	3208	-3554	174
5256	4447	-1815	-1481
5400	2570	-1210	235
7056	2549	-2674	318
4574	4340	-2892	-130
6203	4587	-3273	-305
5103	1925	-2715	-2137
3905	4296	-1700	247
4421	4605	-3299	811
5671	1273	-3870	-924
5486	1805	-4901	133
6437	2578	-1828	-106
5530	5253	-5058	1223
4816	2025	-1215	1443
3457	3525	-2456	3217
3316	2595	1108	2459
3068	3810	-2207	1926
6351	5436	-6470	600
6324	4240	-5365	2416
4851	4774	-4075	1878
4900	3679	-5198	1078
8347	3633	-4565	-171
5244	5718	-3853	173
3960	3492	-2939	2105
6070	3473	-2351	161
8228	3034	-3360	-901
7006	3985	-1940	-1926
7123	4681	-4301	-878
5122	4097	-1851	-49
6200	2060	-2251	1049
7106	3844	-7209	2625
7108	3370	-6734	533
6859	2849	-3992	1360
5458	2278	-3253	1131
-1072	-2109	4783	-1073
-319	-2604	4257	-2418
2466	1300	3476	-314
2847	-1502	5296	-141
1667	-1273	5559	-2725
2877	-3402	6434	204
53	-2	5275	-1181
1091	-221.	5803	-1549
2397	-922	4327	1182
219	-3747	4647	-1564
-29	-2705	4812	1277
1499	-2608	5648	1407
2139	-2399	4202	2791
-426	-2064	5528	151
2560	-2802	6179	-2806
4537	-2479	3797	1095
888	-3357	5341	-415
4460	-1814	5388	-1227
3920	-3268	6364	-703
3343	-4698	4410	784
309	-1897	6306	1223
958	-3318	4254	-3167
-99	1596	6018	-1983
-429	-853	6407	878
1170	-1322	6290	-417
2288	-505	6303	-1999
3312	-1674	6749	-2494
-415	-3401	4721	-371
-189	-1210	4844	-2002
888	-4142	4377	130
2469	-4381	5398	-2492
2879	-2912	5094	-2598
-717	-617	5650	-685
1470	-3863	5352	-1684
3935	-96	3823	-730
3769	-430	3168	694
2556	385	3539	512
77	-1415	5111	2655
2724	-2158	6715	-822
1832	1001	5385	-1900
900	2198	4464	-559
441	69	5921	-1743
-1161	738	6732	-308
257	2035	4091	736
1607	1288	4355	-23
-13	1316	4180	1672
1511	1336	3057	1435
2189	-3813	4530	939
3632	-706	2646	1375
4266	-3761	4241	1077
3101	-427	5273	-1202
2293	276	4810	-313
3430	-1851	3101	2045
3453	-2979	5142	942
1683	-3281	4802	2002
3954	-4715	5611	578
1272	-155	5085	454
128	-194	5095	1409
820	880	5797	-2658
-1095	656	5774	1095
813	-1669	4320	-3251
-119	518	6372	-651
2922	-4299	6115	-877
4205	-4273	4004	2642
-1211	-3892	224	3127
-34	-4371	1321	2318
77	-6326	1201	828
3995	-3775	1958	3233
178	-3301	1985	3318
2330	-3801	1033	3195
1413	-5536	826	1709
2468	-3499	3653	3631
741	-4617	1723	2008
1246	-3043	2978	3949
-343	-4308	2258	2189
-682	-4640	454	2272
1236	-4829	2491	1642
-512	-3766	1182	3052
119	-3939	3712	971
-1145	-4624	1360	2281
101	-4746	2866	1255
-1500	-5455	539	1637
-969	-5909	1414	1128
-1261	-4939	-231	2022
-226	-5345	1207	705
2712	-5109	3205	1866
-476	-5913	273	1208
-2039	-4464	624	2545
-2351	-3930	2019	2673
-2675	-4849	1522	1990
-1524	-3461	1446	3204
477	-5314	1710	1577
656	-3729	2346	2511
550	-5917	1975	1040
1728	-4704	3067	1058
-9	-5247	506	1760
-574	-5135	1675	1672
2129	-3781	3444	2313
1144	-4439	2214	2529
1292	-4160	3185	1833
2445	-3262	2534	3227
2266	-4401	2023	2400
-587	-3602	3408	2067
-885	-4951	3228	1174
-728	-2711	2807	3552
1019	-3043	3195	2954
1888	-4615	1140	2454
660	-5616	754	800
-1975	-5371	1649	1585
-1544	-5436	2422	1081
-422	-5882	2390	750
1336	-5557	2441	1230
136	-4001	267	2854
-522	-3289	2226	2728
-971	-4580	2471	708
704	-5306	3300	1001
325	-3464	3555	2398
794	-3686	848	3169
660	-3017	4584	3242
-1486	-3978	2170	1644
-1615	-4650	2688	1844
750	-4578	538	2239
1668	-5849	1455	1031
3486	-4681	2030	2183
2642	-5429	1696	1761

-2482	-6572	753	619
-2554	-8136	-648	-429
-1012	-7870	-3	-421
-3604	-6247	32	-3102
-1486	-7271	2013	-1021
-578	-6799	-523	405
2841	-5948	1644	911
-2411	-7473	1084	-484
-2238	-6033	294	-1059
-3459	-6470	-201	-790
-2027	-6009	1833	805
-1433	-8047	1531	-1754
3258	-7884	763	-1422
-1544	-6928	-729	478
-2314	-8415	74	-3757
-3201	-5684	95	-2214
-2423	-8694	725	-3631
-3545	-7071	1162	-1798
-294	-9662	403	-2274
2290	-5460	1196	402
-1603	-6713	903	-2363
4121	2491	-3142	-2482
4500	3305	-3671	-1567
5973	3172	-1348	-534
4830	3379	-1549	643
5214	3938	-2641	-2302
4639	4826	-5532	-847
5639	2731	-2170	-963
6084	3487	-3525	-1346
5971	3154	-2190	-2316
5618	4865	-6927	116
5345	3568	-7391	709
5429	5078	-3811	-1524
6960	2037	-3515	-1096
7092	2531	-4557	-588
6061	4247	-5651	-478
4595	3684	-4907	-827
7497	3213	-3048	-424
5996	2137	-3098	-1745
6198	5199	-2223	-2274
6888	2851	-2768	-1675
6114	4210	-2316	-954
7127	4242	-3041	-1408
6126	3668	-1517	-1427
6245	6129	-4225	-1186
6816	3213	-2101	-964
5345	5276	-2643	-847
6592	4665	-4338	484
6746	3751	-3443	124
5453	1980	-2738	2606
4662	2179	-4226	-1059
5571	3208	-3554	174
5256	4447	-1815	-1481
5400	2570	-1210	235
7056	2549	-2674	318
4574	4340	-2892	-130
6203	4587	-3273	-305
5103	1925	-2715	-2137
3905	4296	-1700	247
4421	4605	-3299	811
5671	1273	-3870	-924
5486	1805	-4901	133
6437	2578	-1828	-106
5530	5253	-5058	1223
4816	2025	-1215	1443
3457	3525	-2456	3217
3316	2595	1108	2459
3068	3810	-2207	1926
6351	5436	-6470	600
6324	4240	-5365	2416

4851	4774	-4075	1878
4900	3679	-5198	1078
8347	3633	-4565	-171
5244	5718	-3853	173
3960	3492	-2939	2105
6070	3473	-2351	161
8228	3034	-3360	-901
7006	3985	-1940	-1926
7123	4681	-4301	-878
5122	4097	-1851	-449
6200	2060	-2251	1049
7106	3844	-7209	2625
7108	3370	-6734	533
6859	2849	-3992	1360
5458	2278	-3253	1131
-1072	-2109	4783	-1073
-319	-2604	4257	-2418
2466	1300	3476	-314
2847	-1502	5296	-141
1667	-1273	5559	-2725
2877	-3402	6434	204
53	-2	5275	-1181
1091	-221.	5803	-1549
2397	-922	4327	1182
219	-3747	4647	-1564
-29	-2705	4812	1277
1499	-2608	5648	1407
2139	-2399	4202	2791
-426	-2064	5528	151
2560	-2803	6179	-2806
4537	-2479	3797	1095
888	-3357	5341	-415
4460	-1814	5388	-1227
3920	-3268	6364	-703
3343	-4698	4410	784
309	-1897	6306	1223
958	-3318	4254	-3167
-99	1596	6018	-1983
-429	-853	6407	878
1170	-1322	6290	-417
2288	-505	6303	-1999
3312	-1674	6749	-2494
-415	-3401	4721	-371
-189	-1210	4844	-2002
888	-4142	4377	130
2469	-4381	5398	-2492
2879	-2912	5094	-2598
-717	-617	5650	-685
1470	-3863	5352	-1684
3935	-96	3823	-730
3769	-430	3168	694
2556	385	3539	512
77	-1415	5111	2655
2724	-2158	6715	-822
1832	1001	5385	-1900
900	2198	4464	-559
441	69	5921	-1743
-1161	738	6732	-308
257	2035	4091	736
1607	1288	4355	-23
-13	1316	4180	1672
1511	1336	3057	1435
2189	-3813	4530	939
3632	-706	2646	1375
4266	-3761	4241	1077
3101	-427	5273	-1202
2293	276	4810	-313
3430	-1851	3101	2045
3453	-2979	5142	942
1683	-3281	4802	2002

3954	-4715	5611	578
1272	-155	5085	454
128	-194	5095	1409
820	880	5797	-2658
-1095	656	5774	1095
813	-1669	4320	-3251
-119	518	6372	-651
2922	-4299	6115	-877
4205	-4273	4004	2642
-1211	-3892	224	3127
-34	-4371	1321	2318
77	-6326	1201	828
3995	-3775	1958	3233
178	-3301	1985	3318
2330	-3801	1033	3195
1413	-5536	826	1709
2468	-3499	3653	3631
741	-4617	1723	2008
1246	-3043	2978	3949
-343	-4308	2258	2189
-682	-4640	454	2272
1236	-4829	2491	1642
-512	-3766	1182	3052
119	-3939	3712	971
-1145	-4624	1360	2281
101	-4746	2866	1255
-1500	-5455	539	1637
-969	-5909	1414	1128
-1261	-4939	-231	2022
-226	-5345	1207	705
2712	-5109	3205	1866
-476	-5913	273	1208
-2039	-4464	64	2545
-2351	-3930	2019	2673
-2675	-4849	1522	1990
-1524	-3461	1446	3204
477	-5314	1710	1577
656	-3729	2346	2511
550	-5917	1975	1040
1728	-4704	3067	1058
-9	-5247	506	1760
-574	-5135	1675	1672
2129	-3781	3444	2313
1144	-4439	2214	2529
1292	-4160	3185	1833
2445	-3262	2534	3227
2266	-4401	2023	2400
-587	-3602	3408	2067
-885	-4951	3228	1174
-728	-2711	2807	3552
1019	-3043	3195	2954
1888	-4615	1140	2454
660	-5616	754	800
-1975	-5371	1649	1585
-1544	-5436	2422	1081
-422	-5882	2390	750
1336	-5557	2441	1230
136	-4001	267	2854
-522	-3289	2226	2728
-971	-4580	2471	708
704	-5306	3300	1001
325	-3464	3555	2398
794	-3686	848	3169
660	-3017	4584	3242
-1486	-3978	2170	1644
-1615	-4650	2688	1844
750	-4578	538	2239
1668	-5849	1455	1031
3486	-4681	2030	2183
2642	-5429	1696	1761

9214	1561	-2464	-1139	-2951	454	-13	3643	-327	-3107	-640	3687
6154	1318	-1237	-2917	-2262	1815	-370	2880	-197	764	572	5486
7917	2847	-1797	-1599	-2383	3657	-649	576	646	-767	1388	5464
8309	2029	-2555	-465	-3541	-161	-1389	2550	104	2742	-228	3907
8204	1282	-584	-2405	-4241	1575	1325	2561	-236	1829	-579	4585
8440	1035	-1147	-1137	-2767	4037	1221	1578	-2150	-474	-1525	4006
7107	1858	-60	-1568	-3748	2697	1148	1801	-23	-2632	-2400	3892
6781	2912	-873	-1463	-4686	2385	-220	0	-12	-1739	-2910	4867
7603	1316	-319	-1249	-1531	1645	-2751	1327	-2310	-368	-102	4583
7833	1335	-78	-1849	-45	4032	-799	2298	-1991	-2061	533	4531
7930	1141	-1016	-695	-2915	2280	709	2495	3884	-1446	-153	4393
7883	1610	-1017	-1314	-1199	3278	-406	2346	1568	14	-289	5268
8069	1409	-1811	-196	-2471	116	-2706	2060	-1376	-253	-2797	3417
8319	1031	-582	-1590	-2440	2173	-2894	-344	3193	-2577	2475	3566
5948	1537	-2153	-2373	-3375	2287	1781	3226	3418	617	1350	1857
8684	1171	-1871	-850	-2153	3568	1827	2918	3792	-24	-272	3370
8357	2484	-2411	-1292	-862	2267	-1626	2527	153	1159	2906	2877
6516	2092	-193	-1167	-2698	1135	301	4239	511	2162	1548	2741
6112	1697	22	-525	-2364	2123	1010	3710	262	819	-2791	3734
7161	703	-602	-1879	-2447	3281	-81	1408	4232	-2015	1486	3477
6047	2351	-807	-219	-2660	4735	472	258	2943	-1110	-1014	5480
8072	1854	-1817	-1553	-1053	3097	2682	2398	2842	369	703	3476
6956	1304	76	-1011	-3366	-1037	-1152	-868	3011	1634	-933	3553
6617	1481	-544	-162	-643	4242	2212	1259	4412	-1548	-942	5021
6958	2541	265	1938	971	3991	934	643	-1405	593	2372	5267
6416	2514	-777	-850	-1617	2002	2139	2195	2093	2129	896	2365
7272	2110	-899	-1171	-4897	972	784	1719	4845	-1980	0	3823
7741	2153	-283	-2614	-1275	2992	1039	3821	-2140	81	3278	5637
6482	2041	-1758	-1221	-392	4973	-209	1821	1484	2665	-324	3653
6762	940	-1862	-2281	-1028	4718	-1479	-137	10	192	1620	5291
5610	1194	-1691	-1561	50	3914	553	2210	2152	738	-2269	5000
7833	2164	-823	-1952	678	4364	359	1303	2102	2748	-1652	4707
5469	1438	-848	1189	-582	4911	514	1671	2855	-2131	-387	5188
6011	1377	-771	-1557	1276	3914	-1252	2934	1173	676	1338	3277
7679	544	-1134	-2214	-1496	3984	857	2330	2340	-2329	-2064	4095
7209	1292	-2714	-1564	772	4744	-655	2332	861	-2024	1296	5055
5567	1200	-404	-169	-799	5283	-439	624	2189	3225	-695	2626
5853	1461	-1465	-518	1341	2937	650	2027	6196	-7079	1943	-822
6782	689	-844	-860	-1739	4892	1275	1702	4547	-4813	3261	1856
7330	1337	1152	-71	-892	2596	-151	3951	4243	-6904	3443	448
7189	1906	-653	-685	-3532	1090	1292	32	4581	-7503	946	506
6860	2116	-1403	-240	321	3146	2647	1475	6626	-7754	3427	470
8804	1516	-1391	-1760	264	4199	-1591	1317	3407	-9088	3269	-1496
7210	2689	1498	-989	-452	-2357	2266	4192	4079	-6464	2304	777
7039	3022	1441	-2083	3022	-1033	-2389	5678	5621	-9336	2684	-768
5469	1836	-407	525	-1162	-1342	3543	4990	5351	-6464	5238	-214
7451	3009	717	2464	-474	-1477	-1223	5016	5961	-8007	1724	-3091
7384	1656	2007	398	-699	-2857	900	3835	4213	-8067	603	-246
6504	707	1919	-134	-461	-2255	-117	4626	7208	-7403	3168	-1738
1851	3639	2279	-695	1204	-2062	-1211	4403	6098	-7700	329	-1379
4037	1644	77	1329	2192	-3035	-337	3966	6525	-6735	4248	-1072
4025	1980	-1565	-567	108	-831	279	5643	6073	-6241	2167	-2378
3430	2495	-795	568	1457	-620	-2908	5276	4609	-9218	3051	-1033
4771	2480	993	756	-2527	-78	1085	5460	6813	-7283	1581	-1897
3431	2058	-2539	-971	-1978	-1918	-949	4733	6126	-6275	2789	681
3802	3418	380	217	32	367	-1904	5166	4423	-6538	1621	-1692
3074	3350	-1652	-1056	1890	-1665	440	4752	6272	-8298	3167	-1855
3705	326	1650	1535	-518	-348	2816	4891	6172	-8558	4498	-1169
3122	1281	1192	1607	3695	-2490	-1374	4603	4844	-8588	1647	-366
4601	1367	-968	53	246	-1965	3549	3969	6209	-8807	1581	-369
3808	958	44	2560	1100	-3111	656	3737	5389	-8059	550	-192
2079	2530	-1485	1166	-1379	870	-414	4575	6654	-9775	2504	-1063
3707	343	-2889	180	628	-357	-1227	6179	7103	-7998	806	530
5249	1431	-31	688	-1129	-1318	-2457	4576	5662	-6736	1565	-3620
4990	125	-704	1270	-425	-98	-73	6336	4165	-9564	4191	-2131
2771	1334	-2446	746	367	-887	2990	4207	4526	-7181	576	-2875
2292	994	-1527	2630	2091	-1251	2444	3557	4633	-8623	2877	-4742
1261	3070	-2519	268	-1759	-1610	2046	5273	3709	-7794	1815	34
2544	3890	-1057	-552	3210	1414	-20	2616	3634	-8622	2313	-826
-4421	255	-1980	530	3303	2636	1005	4237	6991	-8447	2063	-3198

9214	1561	-2464	-1139	-2951	454	-13	3643	-327	-3107	-640	3687
6154	1318	-1237	-2917	-2262	1815	-370	2880	-197	764	572	5486
7917	2[illegible]7	-1797	-1599	-2383	3657	-649	576	646	-767	1388	5464
8309	2029	-2555	-465	-3541	-161	-1389	2550	104	2742	-228	3907
8204	1282	-584	-2405	-4241	1575	1325	2561	-236	1829	-579	4585
8440	1035	-1147	-1137	-2767	4037	1221	1578	-2150	-474	-1525	4006
7107	1858	-60	-1568	-3748	2697	1148	1801	-23	-2632	-2400	3892
6781	2912	-873	-1463	-4686	2385	-220	0	-12	-1739	-2910	4867
7603	1316	-319	-1249	-1531	1645	-2751	1327	-2310	-368	-102	4583
7833	1335	-78	-1849	-45	4032	-799	2298	-1991	-2061	533	4531
7930	2141	-1016	-695	-2915	2280	709	2495	3884	-1446	-153	4393
7883	1610	-1017	-1314	-1199	3278	-406	2346	1568	14	-289	5268
8069	1409	-1811	-196	-2471	116	-2706	2060	-1376	-253	-2797	3417
8319	1031	-582	-1590	-2440	2173	-2894	-344	3193	-2577	2475	3566
5948	1537	-2153	-2373	-3375	2287	1781	3226	3418	617	1350	1857
8684	1171	-1871	-850	-2153	3568	1827	2918	3792	-24	-272	3370
8357	2484	2411	-1292	-862	2267	-1626	2527	153	1159	2906	2877
6516	2092	-193	-1167	-2698	1135	301	4239	511	2162	1548	2741
6112	1697	22	-525	-2364	2123	1010	3710	262	819	-2791	3734
7161	703	-602	-1879	-2447	3281	-81	1408	4232	-2015	1486	3477
6047	2351	-807	-219	-2660	4735	472	258	2943	-1110	-1014	5480
8072	1854	-1817	-1553	-1053	3097	2682	2398	2842	369	703	3476
6956	1304	76	-1011	-3366	-1037	-1152	-868	3011	1634	-933	3553
6617	1481	-544	-162	-643	4242	2212	1259	4412	-1548	-942	5021
6958	2541	265	1938	971	3991	934	643	-1405	593	2372	5267
6416	2514	-777	-850	-1617	2002	2139	2195	2093	2129	896	2365
7272	2110	-899	-1171	-4897	972	784	1719	4845	-1980	0	3823
7741	2153	-283	-2614	-1275	2992	1039	3821	-2140	81	3278	5637
6482	2041	-1758	-1221	-392	4973	-209	1821	1484	2665	-324	3653
6762	940	-1862	-2281	-1028	4718	-1479	-137	10	192	1620	5291
5610	1194	-1691	-1561	50	3914	553	2210	2152	738	-2269	5000
7833	2164	-823	-1952	678	4364	359	1303	2102	2748	-1652	4707
5693	1438	-848	1189	-582	4911	514	1671	2855	-2131	-387	5188
6011	1377	-771	-1557	1276	3914	-1252	2934	1173	676	1338	3277
7679	544	-1134	-2214	-1496	3984	857	2330	2340	-2329	-2064	4095
7209	1292	-2714	-1564	772	4744	-655	2332	861	-2024	1296	5055
5567	1200	-404	-169	-799	5283	-439	624	2189	3225	-695	2626
5853	1461	-1465	-518	1341	2937	650	2027	6196	-7079	1943	-822
6782	689	-844	-860	-1739	4892	1275	1702	4547	-4813	3261	1856
7330	1337	-1152	-71	-892	2596	-151	3951	4243	-6904	3443	448
7189	1506	-653	-685	-3532	1090	1292	32	4581	-7503	946	506
6860	2116	-1403	-240	321	3146	2647	1475	6626	-7754	3427	470
8804	1516	-1391	-1760	264	4199	-1591	1317	3407	-9088	3269	-1496
7210	2689	-1498	989	-452	-2357	2266	4192	4079	-6464	2304	777
7031	3022	1441	-2083	3022	-1033	-2389	5678	5621	-9336	2684	-768
5669	1836	-407	525	-1162	-1342	3543	4990	5351	-6464	5238	-214
7451	3699	717	2464	-474	-1477	-1223	5016	5961	-8007	1724	-3091
7384	1656	2007	398	-699	-2857	900	3835	4213	-8067	603	-246
6904	707	1919	-134	-461	-2255	-117	4626	7108	-7403	3168	-1738
1851	3639	2279	-695	1204	2062	-1211	4403	6098	-7700	329	-1379
4037	1644	77	1329	2192	-3035	-337	3966	6525	-6735	4248	-1072
4025	1960	-1565	-567	108	-831	279	5643	6073	-6241	2167	-2378
3430	2495	-795	768	1457	-620	-2908	5276	4609	-9218	3051	-1033
4771	2480	993	756	-2527	-78	1085	5460	6813	-7283	1581	-1897
3431	2058	-2539	-971	-1978	-1918	-949	4733	6126	-6275	2789	681
3802	3418	380	217	32	367	-1904	5166	4423	-6538	1621	-1692
3074	3350	1652	-1056	1890	-1665	440	4752	6272	-8298	3167	-1855
3705	326	-1650	1535	-518	-348	2816	4891	6172	-8558	4498	-1169
3122	1281	-1192	1607	3695	-2490	-1374	4603	4844	-8588	1647	-366
4601	1367	-968	53	246	-1965	3549	3969	6209	-8807	1581	-369
3808	958	44	2560	1100	-3111	656	3737	5389	-8059	550	-192
2079	2530	-1485	1166	-1379	870	-414	4575	6654	-9775	2504	-1063
3707	343	-2889	180	628	-357	-1227	6179	7103	-7998	806	530
5249	1431	-31	688	-1129	-1318	-2457	4576	5662	-6736	1565	-3620
4990	125	-704	1270	-425	-98	-73	6336	4165	-9564	4191	-2131
2771	1334	-2446	746	367	-887	2990	4207	4526	-7181	576	-2875
2492	944	-1527	2630	2091	-1251	2444	3557	4633	-8623	2877	-4742
1281	3070	-2519	268	-1759	-1610	2046	5273	3709	-7794	1815	34
2544	3890	-1057	-552	3210	1414	-20	2616	3634	-8622	2313	-826
4421	255	-1980	530	3303	2636	1005	4237	6991	-8447	2063	-3198

10152	-5617	1511	-1917
7800	-6473	51	-1337
7941	-5560	2438	-3270
6554	-3834	2100	1476
9065	-5520	-226	-1120
10794	-7120	-243	122
10429	-6968	272	-806
8942	-8914	1442	-392
9969	-5051	2033	-2953
7275	-4152	3058	-64
11127	-5488	4589	-3227
9626	-6666	2739	-2958
6943	-5362	4470	1008
7456	-967	2936	-1002
8622	-333	6962	2606
7486	-3392	3668	1287
8053	-827	5148	1097
6610	454	4952	96
7701	-1982	3161	-468
7307	-1132	4071	-36
8125	-271	5199	3862
9182	-1950	2813	1878
9855	-952	4794	3010
7241	1431	4202	2468
9646	157	4766	1046
9371	1230	6009	2958
11514	-64	8630	5248
6766	565	2766	2140
8426	-9	2852	1271
11291	-1113	5087	2937
8297	2092	4495	1264
9983	735	3809	-51
9048	-1000	3191	-308
7331	-1987	2655	1391
7144	-21	4333	2161
6032	-1540	3543	896
7987	-1036	1985	1529
9264	2004	5194	290
11308	-840	5754	1654
9130	-2398	4292	2973
6248	838	3563	1223
6819	-2760	3511	119
7213	-2006	4364	762
5431	1047	4533	166
7698	-641	2921	639
8628	-2249	3588	399
6352	-1498	3560	-648
7033	2190	4870	2562
7465	-46	3772	581
6104	796	5143	1965
5787	943	5784	3030
8367	1465	7192	4097
8259	789	5694	1963
10614	-1899	5748	2645
8258	-805	3698	2275
6877	-972	6431	3160
6483	363	7018	3129
6283	1358	5191	1524
6853	3157	4119	1741
6086	267	3883	835
7254	1032	6613	4017
11470	-3350	4649	3426
6743	481	6148	1239
5394	-166	5309	3165
7958	1068	4268	-240
10520	2256	7916	2828
5132	4	5739	1176
6643	120	3255	-629
9631	1974	8870	4362
10663	-1221	5733	589

-8224	-1843	5806	2655
-8282	1255	8647	3478
-12311	-1505	9043	6256
-11312	-856	7136	4681
-11944	-722	7941	3309
-7868	-463	6846	4196
-8679	-241	7410	5347
6759	-4680	-508	1220
5176	-6111	944	121
6843	-5667	-1368	-533
5616	-5884	-1471	-695
6030	-5089	-1808	-940
7444	-5463	-52	1881
4207	-6079	-506	1571
6785	-4410	-649	3084
4838	-5214	2026	2998
4201	-5790	645	1811
6930	-5129	-1940	1698
6332	-4627	692	3027
6285	-4314	-106	3644
6255	-5450	-1975	742
4199	-4676	-459	1796
5592	-5500	1345	1300
4358	-5556	-2236	114
4620	-5875	-1563	888
4892	-7550	-327	-419
4734	-7085	7	613
3883	-5562	-1969	1080
5610	-4990	-204	834
4117	-6482	-1271	341
6585	-5107	892	1169
6632	-3683	302	3002
6326	-5351	-983	-1250
4382	-7192	-730	-158
5227	-6540	-451	1123
5468	-6472	-870	-1471
5191	-6402	-1365	-127
7407	-6317	-973	-336
4611	-6530	-820	-1980
4963	-5159	-2050	-966
4414	-5691	-211	-998
5954	-5873	750	-1749
4394	-4796	-1268	254
7161	-6214	-1010	689
4965	-3598	2372	1711
6248	-6180	981	864
6473	-5336	525	-600
4591	-6864	-1131	-900
6314	-6440	-1021	-375
5838	-6209	-1199	944
5308	-5283	-2100	1267
4342	-5860	-1637	-1356
5680	-4388	-1227	-104
4900	-4098	1449	4046
4677	-4284	-106	3190
7574	-6173	-848	1859
6493	-7207	-131	726
5513	-5261	-2117	4
6191	-7352	-193	-505
5885	-4333	324	-134
6162	-6081	-312	-2044
4216	-6200	-1810	-572
5652	-7035	-696	-197
7131	-7189	-366	-60
5032	-4803	-1514	2832
7386	-4610	-606	3489
4211	-5031	1221	3047
6050	-4653	1584	1469
6852	-5302	-1861	206
7736	-4816	-1794	3359

6290	-3439	1522	2454
1768	5990	-5560	-2594
3903	5326	-1530	-1501
2472	3738	-2117	-4240
3260	5448	-904	-4733
1435	7297	-3676	-4102
4096	5951	-656	-3312
2178	6009	-3146	-3724
3787	5493	-5473	-1633
2998	7286	-3334	-3571
2894	6576	-4708	-2804
830	6163	-4286	-3348
4755	5569	-1730	-2739
4604	6065	-3562	-2605
2749	5141	-3986	-2775
3942	4875	-2143	-3340
2819	8517	-2004	-2724
2146	6298	-689	-3093
5196	6504	-3393	-1475
1851	8386	-1748	-1420
3474	8572	-3534	-2688
4503	7560	-3561	-2245
4433	6219	-2393	-1575
3506	7248	-2275	-1977
3490	7409	-3147	-604
4214	6447	-3520	516
619	7034	-829	-1705
1732	7395	-356	-2208
1226	5204	-3294	-3732
2027	5619	-1813	-4146
3078	5877	47	-2651
1654	5458	424	-682
3163	5464	-2026	-270
2884	5375	-685	-530
2950	7286	-35	-2967
1986	5066	-597	482
3459	4308	-3845	-2333
3155	7037	-1346	-4345
2193	6696	-717	-1319
3677	5080	-3892	-487
2186	5136	-4186	-1492
773	5796	-917	817
2489	6546	3570	-2117
1223	6469	1362	-33
271	6061	-1466	-1725
2540	5171	-1847	1032
2548	5251	-2697	1677
771	7600	-768	-632
4710	6647	-4736	-1275
1369	5917	-2971	-1056
163	5239	-3499	-2275
2104	4285	-3211	-3286
1107	7411	-1972	-1671
2196	7262	-2310	-1926
-244	6439	-1745	-839
3293	3832	-2890	-3000
419	6443	-379	-407
3077	4930	-1156	-2869
2131	5874	-2330	224
690	6538	-2212	-2841
1602	4421	-2515	1542
3318	9373	-3032	-3477
5646	7462	-5153	-1463
4139	7137	-1539	-3321
3481	9077	-1645	-3653
-7747	375	-106	-543
-8587	-1379	-586	-461
-10146	-892	2094	694
-8103	381	504	-325
-8548	-92	94	-656

10152	-5617	1511	-1917
7800	-6473	51	-1337
7941	-5560	2438	-3270
6554	-3834	2100	1476
9065	-5520	-226	-1120
10794	-7120	-243	122
10429	-6968	272	-806
8942	-8914	1442	-392
9969	-5051	2033	-2953
7275	-4152	3058	-64
11127	-5488	4589	-3227
9626	-6666	2739	-2958
6943	-5362	4470	1008
7456	-967	2936	-1002
8622	-333	6962	2606
7486	-3392	3668	1287
8053	-827	5148	1097
6610	454	4952	96
7701	-1982	3161	-468
7307	-1132	4071	-36
8125	-271	5199	3862
9182	-1950	2813	1878
9855	-952	4794	3010
7241	1431	4202	2468
9646	157	4766	1046
9371	1230	6009	2958
11514	-64	8630	5248
6766	565	2766	2140
8426	-9	2852	1271
11291	-1113	5087	2937
8297	2092	4495	1264
9983	735	3809	-51
9048	-1000	3191	-308
7331	-1987	2655	1391
7144	-21	4333	2161
6032	-1540	3543	896
7987	-1036	1985	1529
9264	2004	5194	290
11308	-840	5754	1654
9130	-2398	4292	2973
6248	838	3563	1223
6819	-2760	3511	119
7213	-2006	4364	762
5431	1047	4533	166
7168	-641	2021	639
8628	-2249	3588	399
6352	-1498	3560	-648
7033	2190	4870	2562
7465	-46	3772	-581
6104	796	5143	1965
5787	943	5784	3030
8367	1465	7192	4097
8259	789	5694	1963
10614	-1899	5748	2645
8258	-805	3698	2275
6877	-972	6431	3160
6483	363	7018	3129
6283	1358	5191	1524
8853	3157	4119	1741
6086	267	3883	-835
7254	1032	6613	4017
11470	-3350	4649	3426
6743	481	6148	1239
5394	-166	5309	3165
7958	1068	4268	-240
10520	2256	7916	2828
5132	4	5739	1176
8643	120	3255	-629
9031	1974	8870	4362
10663	-1221	5733	589

-8224	-1843	5806	2655
-8282	1255	8647	3478
-12311	-1505	9043	6256
-11312	-856	7136	4681
-11944	-722	7941	3309
-7868	-463	6846	4196
-8679	-241	7410	5347
6759	-4680	-508	1220
5176	-6111	944	121
6843	-5667	-1368	-533
5616	-5884	-1471	-695
6030	-5089	-1808	-940
7444	-5463	-52	1881
4207	-6079	-506	1571
6785	-4410	-649	3084
4838	-5214	2026	2998
4201	-5790	645	1811
6930	-5129	-1940	1698
6332	-4627	692	3027
6285	-4314	-106	3644
6255	-5450	-1975	742
4199	-4676	-459	1796
5592	-5500	1345	1300
4358	-5556	-2236	114
4620	-5875	-1563	888
4892	-7550	-327	-419
4734	-7085	7	613
3883	-5562	-1969	1080
5610	-4990	-204	834
4117	-6482	-1271	341
6585	-5107	892	1169
6632	-3683	302	3002
6326	-5351	-983	-1250
4382	-7192	-730	-158
5227	-6540	-451	1123
5468	-6472	-870	-1471
5191	-6402	-1365	-127
7407	-6317	-973	-336
4611	-6530	-820	-1980
4963	-5159	-2050	-966
4414	-5691	-211	-998
5954	-5873	750	-1749
4394	-4796	-1268	254
7161	-6214	1010	689
4965	-3598	2372	1711
6248	-6180	981	864
6473	-5336	525	-600
4591	-6864	-1131	-900
6314	-6440	-1021	-375
5838	-6209	-1199	944
5308	-5283	-2100	1267
4342	-5860	-1637	-1356
5680	-4388	-1227	-104
4900	-4098	1449	4046
4677	-4284	-106	3190
7574	-6173	-848	1859
6493	-7207	-131	726
5513	-5261	-2117	4
6191	-7352	-193	-505
5885	-4333	324	-134
6162	-6081	-312	-2044
4216	-6200	-1810	-572
5652	-7035	-696	-197
7131	-7189	-366	-80
5032	-4803	-1514	2832
7386	-4610	-606	3489
4211	-5031	1221	3047
4050	-4653	1584	1469
6852	-5302	-1861	206
7736	-4816	-1794	3359

6290	-3439	1522	2454
1768	5990	-5560	-2594
3903	5326	-1530	-1501
2472	3738	-2117	-4240
3260	5448	-904	-4733
1435	7297	-3676	-4102
4096	5951	-656	-3312
2178	6009	-3146	-3724
3787	5493	-5473	-1633
2998	7286	-3334	-3571
2894	6576	-4708	-2804
830	6163	-4286	-3348
4755	5569	-1730	-2739
4604	6065	-3562	-2605
2749	5141	-3986	-2775
3942	4875	-2143	-3340
2819	8517	-2004	-2724
2146	6298	-689	-3093
5196	6504	-3393	-1475
1851	8386	-1748	-1420
3474	8572	-3534	-2688
4503	7560	-3561	-2245
4433	6219	-2393	-1575
3506	7248	-2275	-1977
3490	7409	-3147	-604
4214	6447	-3520	516
619	7034	-829	-1705
1732	7395	-356	-2208
1226	5204	-3294	-3732
2027	5619	-1813	-4146
3078	5877	47	-2651
1654	5458	424	-682
3163	5464	-2026	-270
2884	5375	-685	-530
2950	7286	-35	-2967
1986	5066	-597	482
3459	4308	-3845	-2333
3155	7037	-1346	-4345
2193	6696	-717	-1319
3677	5080	-3892	-487
2186	5136	-4186	-1492
773	5796	-917	817
2489	6546	-3570	-2117
1223	6469	-1362	-33
271	6061	-1466	-1725
2540	5171	-1847	1032
2548	5251	-2697	1677
771	7600	-768	-632
4710	6647	-4736	-1275
1369	5917	-2971	-1056
163	5239	-3499	-2275
2104	4285	-3211	-3280
1107	7411	-1972	-1671
2196	7262	-2310	-1926
-244	6439	-1745	-839
3293	3832	-2890	-3000
419	6443	-379	-407
3077	4930	-1156	-2869
2131	5874	-2330	224
690	6538	-2212	-2841
1602	4421	-2515	1542
3318	9373	-3032	-3477
5646	7462	-5153	-1463
4139	7137	-1539	-3321
3481	9077	-1645	-3653
-7747	375	-106	-543
-8587	-1379	-586	-461
-10146	-892	2694	694
-8103	382	504	-325
-8548	-92	94	-656

-6083	-5251	2132	425
-4329	-5721	407	-2993
-5326	-5056	1119	-1837
-5485	-5856	185	-2389
-6529	-5178	403	-697
-6719	-4412	2726	871
-5126	-5629	1835	-771
-5622	-4361	2973	858
5282	-5895	45	-335
-4357	-5656	1696	-1558
-7139	-6659	627	-409
-4415	-6328	35	1306
-7639	-6110	1134	197
3626	-5592	2019	901
3547	-5064	1176	1738
-5075	-3899	2087	266
-4086	-6311	1479	360
-6210	-5220	-199	-1477
-3910	-5063	1356	-15
-7616	-4977	461	2401
-6118	-6131	1258	-563
-6127	-4968	1286	-27
-4121	-5852	1113	1476
-5157	-4881	1162	-662
-4637	-5031	1179	709
-5509	-5452	-397	1224
-4597	-6861	646	467
-6247	-4043	468	278
5336	-6465	874	1472
-6998	-6346	78	-1798
-4915	-4530	2756	-203
-6648	-4373	1468	1052
-4273	-7100	942	-323
-6552	-4287	2351	69
-6954	-4613	722	1521
-4201	-5361	763	-1562
-6881	-5596	-748	669
-6695	-3547	-34	1299
3981	-5728	84	111
-4663	-4809	2173	-1031
-6599	-6077	1303	256
-7596	-4265	5791	-4140
-6610	2758	5288	-3936
-5080	3865	-6563	3988
-7228	5510	7677	3912
8854	-6553	-8318	5361
9362	5249	-6413	-4319
4418	3110	-6368	-4358
-5544	-4293	-6863	-5013
-3956	-4316	-5567	3181
3078	5999	5051	2657
5884	-6292	5756	-4013
-4825	-4569	5535	-4053
-4443	-6126	5316	-1368
3972	-6341	-6098	-2686
5751	2781	5398	-6230
-4466	-6135	5570	-3679
-4291	5992	3564	5189
7189	-4429	7279	-6082
5076	-4433	2748	5366
-6225	2825	-6833	5663
2989	-4792	3980	-4492
7836	7773	7722	-5741
-6539	-5703	-5844	-5589
7612	-5438	-4136	-3774
-4218	-4176	-6591	-2333
4837	5063	6581	322
-6560	-5990	2980	3847
5558	-2971	-5489	-1932
7001	-5323	-4975	-1697

-4694	-2688	-6904	-3044
-8511	-5379	-5767	-2549
-7548	-5412	-6522	-2572
-6597	-4973	-6423	-1274
-6415	-4022	-5168	-1072
-5528	-5530	-7218	-2345
-4845	-4805	-5943	-1227
-6049	-7150	-6744	-2161
-9061	-7299	-8542	-4375
-5010	-5546	-5416	-82
-4135	-4205	-5109	-3373
-3311	-5869	-4007	-5061
-5993	-6472	-3962	-4718
-2966	-5832	-2821	-6305
-4851	-5152	-2067	-3930
-3620	-4441	-3362	-5836
-4469	-5221	-4534	-5592
-4022	-6335	-4321	-6107
-4899	-4503	-3084	-3725
-4490	-8276	-4620	-6236
-6591	-4342	-7365	-4063
-6498	-5057	-5553	485
-6060	-2714	-7093	-4144
-6199	-7774	-7094	-4057
-7536	-6424	-6415	-4265
-7439	-2454	-6348	-4827
-5333	-7565	-4417	-4639
-4353	-7103	-4197	-2689
-5229	-6549	-5129	-6804
-6129	-7701	-5236	-4836
-6797	-3983	-3884	-4406
-6624	-4467	-4745	-5052
-3324	-7596	-2720	-6553
-5473	-6284	-1704	-4511
-4131	-7263	-3180	-5196
-7116	-5565	-3469	685
-6002	-6021	-3858	576
-3144	-8203	-1291	-434
-6096	-7027	-4004	1353
-3943	-7709	-2344	-36
-4510	-6767	-2642	631
3657	-11541	-2570	-3984
-5959	-8854	-1333	-867
-6699	-8866	-1606	-344
-3836	-7961	2334	-2028
-3430	-8045	-3037	-672
-3868	-9184	-3635	-1819
-4258	-9060	-2621	-1008
3595	-8693	2022	-752
-4573	-8048	-3166	-2622
-4852	-7903	1405	256
-4591	-7057	-1560	965
-6963	-7655	-980	808
-5179	-6641	-3356	1196
-7102	-6941	-2798	2123
-6867	-5834	-3320	-770
-5977	-7369	-2500	-778
-6160	-6400	-934	-2543
-6741	-7608	-355	-1289
-6856	-6466	-1433	-1643
-4786	-6292	-4970	376
-5407	-8866	-2255	-400
-3814	-6506	-1387	-3620
-4998	-6137	-1200	-4092
-5123	-9557	-2849	-1306
-4259	-6444	-4395	-338
-5221	-6410	-883	1225
-6137	-6215	-2165	554
-3895	-6557	-3176	-1829
-3886	-8188	-87	-954

-7243	-6707	-2216	-316
-5592	-7606	85	-432
-3957	-7945	-504	-144
-4617	-7624	218	-312
-4797	-8737	-844	-1051
-4478	-8516	-1401	-454
-4557	-7058	-302	-2332
-6623	-7736	-271	-50
-3157	-7532	-1111	-2207
-3590	-7300	-1271	517
-4442	-7306	-507	590
-6458	-7524	-2807	666
-4991	-8466	-3363	-785
-7474	-7541	-1056	-1839
-7501	-8316	-938	-180
-5329	-7739	-579	-2341
-4549	-7063	-176	-3539
-5191	-8612	-1504	-4250
3083	-7058	-2251	32
-4003	-7043	-1093	-791
-5523	-8093	-678	-114
-3022	-10265	-2070	-3109
-3905	-6274	-182	-3652
-3269	-9217	-551	-2650
-3138	-9314	-1726	-1704
-4420	-10339	-1744	-3459
-4163	-8609	-2298	-4113
-5566	-6505	-1241	-463
-3130	-9746	-2352	-4884
-7825	-3439	1451	-1468
-8451	-3318	2360	-435
-8462	-4130	1438	-1024
-9425	-4564	1328	-689
-11014	-3202	2278	2080
-8269	-2761	-146	-440
-7497	-2618	-166	413
-8250	-3060	522	-2133
-8365	-5366	1347	-451
-8589	-3979	2943	714
-8111	-2572	1272	-1748
-7830	-5193	605	-1484
-8119	-4736	2141	256
-7724	-4769	1463	-812
-7363	-3911	2540	4
-7974	-3397	2363	1366
-7359	-4204	1752	-958
-7622	-3505	660	916
-9934	-3665	3165	828
-8721	-4162	62	1718
-9433	-4768	2722	1234
-7960	-4496	138	1528
-8198	-3454	-443	631
-7756	-2246	655	1137
-8841	-3145	1113	829
-7817	-3298	1251	230
-9413	-2733	323	-1862
-9408	-4168	1270	1549
-9037	-3892	-942	283
-8255	-3849	1301	1762
-9057	-3987	-41	-682
-9441	-4187	2019	-111
-9740	-3178	1602	-871
-8344	-2474	1461	1506
-9752	-2925	1996	1243
-9199	-3796	180	537
-9060	-2405	1140	-1562
-9348	-2376	309	-166
-10786	-3182	-5	-1500
-8142	-4540	-434	-826
-7528	-2341	1104	-73

-6083	-5251	2132	425	-4694	-2688	-6904	-3044	-7243	-6707	-2216	-316
-4329	-5721	407	-2993	-8511	-5379	-5767	-2549	-5592	-7606	85	-432
-5326	-5056	1119	-1837	-7548	-5412	-6522	-2572	-3957	-7945	-504	-144
-5485	-5856	185	-2389	-6597	-4973	-6423	-1274	-4617	-7624	218	-312
-6529	-5178	403	-697	-6415	-4022	-5168	-1072	-4797	-8737	-844	-1051
-6719	-4412	2726	871	-5528	-5530	-7218	-2345	-4478	-8516	-1401	-454
-5126	-5629	1835	-771	-4845	-4805	-5943	-1227	-4557	-7058	-302	-2332
-5622	-4361	2973	858	-6049	-7150	-6744	-2161	-6623	-7736	-271	-50
-5282	-5895	45	-335	-9061	-7299	-8542	-4375	-3157	-7532	-1111	-2207
-4357	-5656	1696	-1558	-5010	-5546	-5416	-82	-3590	-7300	-1271	517
-7139	-6659	627	-409	-4135	-4205	-5109	-3373	-4442	-7306	-507	590
-4415	-6328	35	1306	-3311	-5869	-4007	-5061	-6458	-7524	-2807	666
-7639	-6110	1134	197	-5993	-6472	-3962	-4718	-4991	-8466	-3363	-785
-3626	-5592	2019	901	-2966	-5832	-2821	-6305	-7474	-7541	1056	-1839
-3547	-5064	1176	1738	-4851	-5152	-2067	-3930	-7501	-8316	-938	-180
-5075	-3899	2087	266	-3620	-4441	-3362	-5836	-5329	-7739	-579	-2341
-4086	-6311	1479	360	-4469	-5221	-4534	-5592	-4549	-7063	-176	-3539
-6210	-5220	-199	-1477	-4022	-6335	-4321	-6107	-5191	-8612	-1504	-4250
-3910	-5063	1356	-15	-4899	-4503	-3084	-3725	3083	-7058	-2251	32
-7616	-4977	461	2401	-4490	-8276	-4620	-6236	-4003	-7043	-1093	-791
-6118	-6131	1258	-563	-6591	-4342	-7365	-4063	-5523	-8093	-678	-114
-6127	-4968	1286	-27	-6498	-5057	-5553	485	-3022	-10265	-2070	-3109
-4121	-5852	1113	1476	-6060	-2714	-7093	-4144	-3905	-6274	-182	-3652
-5157	-4881	1162	-662	-6199	-7774	-7094	-4057	-3269	-9217	-551	-2650
-4637	-5031	1179	709	-7536	-6424	-6415	-4265	-3138	-9314	-1726	-1704
-5509	-5452	-397	1224	-7439	-2454	-6348	-4827	-4420	-10339	-1744	-3459
-4597	-6861	646	467	-5333	-7565	-4417	-4639	-4163	-8609	-2298	-4113
-6247	-4043	468	278	-4353	-7103	-4197	-2689	-5566	-6505	-1241	-463
-5336	-6465	874	-1472	-5229	-6549	-5129	-6804	-3130	-9746	-2352	-4884
-6998	-6346	78	-1798	-6129	-7701	-5236	-4836	-7825	-3439	1451	-1468
-4915	-4530	2756	-203	-6797	-3983	-3884	-4406	-8451	-3318	2360	-435
-6648	-4373	1468	1052	-6624	-4467	-4745	-5052	-8462	-4130	1438	-1024
-4273	-7100	942	-323	-3324	-7596	-2720	-6553	-9425	-4564	1328	-689
-6552	-4287	2351	69	-5473	-6284	-1704	-4511	-11014	-3202	2278	2080
-6954	-4613	722	1521	-4131	-7263	-3180	-5196	-8269	-2761	-146	-440
-4201	-5361	763	-1562	-7116	-5565	-3469	685	-7497	-2618	-166	413
-6881	-5596	-748	669	-6002	-6021	-3858	576	-8250	-3060	522	-2133
-6695	-3547	-34	1299	-3144	-8203	-1291	-434	-8365	-5366	1347	-451
-3981	-5728	84	111	-6096	-7027	-4004	1353	-8589	-3979	2943	714
-4663	-4809	2173	-1031	-3943	-7709	-2344	-36	-8111	-2572	1272	-1748
-6599	-6077	1303	256	-4510	-6767	-2642	631	-7830	-5193	605	-1484
-7596	-4265	5791	-4140	-3657	-11541	-2570	-3984	-8119	-4736	2141	256
-6610	-2758	-5288	3936	-5959	-8854	-1333	-867	-7724	-4769	1463	-812
-5889	-3865	-6563	3088	-6699	-8866	-1606	-344	-7363	-3911	2540	4
-7228	-5510	-7677	-3912	-3836	-7961	-2334	-2028	-7974	-3397	2363	1366
-8854	-6553	-8318	5361	-3430	-8045	-3037	-672	-7359	-4204	1752	-958
-9362	-5249	-6413	-4319	-3868	-9184	-3635	-1819	-7622	-3505	660	916
-4418	-3110	-6368	-4358	-4258	-9060	-2621	-1008	-9934	-3665	3165	828
-5544	-4203	-6863	-5013	-3595	-8693	-2022	-752	-8721	-4162	62	1718
-3456	-4316	-5567	-3181	-4573	-8048	-3166	-2622	-9433	-4768	2722	1234
-3678	-5999	-5051	-2657	-4852	-7903	-1405	256	-7960	-4496	138	1528
-5884	-6292	-5756	-4013	-4591	-7057	-1560	965	-8198	-3454	-443	631
-4825	-4549	-5535	-4053	-6963	-7655	-980	808	-7756	-2246	655	1137
-4443	-6126	-5316	-1368	-5179	-6641	-3356	1196	-8841	-3145	1113	829
-3972	-6341	-6098	-2686	-7102	-6941	-2798	2123	-7817	-3298	1251	230
-5751	-2781	-5398	-6230	-6867	-5834	-3320	-770	-9413	-2733	323	-1862
-4466	-6135	-5570	-3679	-5977	-7369	-2500	-778	-9408	-4168	1270	1549
-4291	-5992	-3564	-5189	-6160	-6400	-934	-2543	-9037	-3892	-942	283
-7189	-4429	-7279	-6082	-6741	-7608	-355	-1289	-8255	-3849	1301	1762
-5076	-4433	-2748	-5366	-6856	-6466	-1433	-1643	-9057	-3987	-41	-682
-6225	-2825	-6833	-5463	-4786	-6292	-4970	376	-9441	-4187	2019	-111
-2989	-4792	-3980	-6492	-5407	-8866	-2255	-600	-9740	-3178	1602	-871
-7836	-7773	-7722	-5741	-3814	-6506	-1387	-3620	-8344	-2674	1461	1506
-6559	-5703	-5844	-5589	-4998	-6137	-1200	-4092	-9752	-2925	1996	1243
-7612	-5438	-4136	-3774	-5123	-9557	-2849	-1306	-9199	-3796	180	537
-4218	-4176	-6591	-2333	-4259	-6444	-4395	-338	-9080	-2405	1140	-1562
-6837	-5063	-6581	322	-5221	-6810	-883	1225	-9148	-2376	309	-162
-6560	-5990	-2980	-3847	-6137	-6215	-2165	554	-10786	-3182	-5	-1500
-5558	-2971	-5489	-1932	-3895	-6557	-3176	-1829	-8142	-4540	-434	-826
-7001	-3823	-4975	-1697	-3886	-8188	-87	-934	-7528	-2341	1104	-73

-12847	-4496	2984	1123
-13860	-7915	-1166	-547
-12276	-8145	-2290	-1527
-11417	-4830	2933	1854
-11793	-6002	1163	1940
11443	-4920	-3235	3151
11300	-6616	-1506	1175
9198	-4628	-2060	2390
10532	-4027	-643	912
9902	-3573	-1606	1327
9653	3536	-2240	1869
9948	-5171	-423	2662
12316	-4004	-1989	281
12125	-4800	-1265	-163
10650	-2617	-2337	1462
9909	-4968	-2376	916
12944	-4647	-1958	460
12988	-5283	-1141	41
12321	-2915	-3621	1025
11449	-2894	-2728	351
12087	-3041	-2002	-32
11558	-4031	-1343	-399
12983	-3740	-3516	1245
12999	-2515	-2752	225
12515	-3465	-2701	550
14683	-5022	52[illegible]	2996
.2260	-3383	-12 5	-528
13810	-5422	-2443	1166
13421	5378	-1886	721
12961	-4259	-2594	796
12266	-2104	-4768	1591
13523	-4710	3045	1342
12437	2099	5610	2117
11850	-2183	3497	661
12275	3936	-597	-697
12459	-5253	-517	-544
12835	-4094	-1322	-168
14360	-5677	-3305	1859
13905	-4552	-4309	2117
[illegible]	3412	1847	81
[illegible]	3167	5764	2746
11910	1634	-4342	1052
12662	-4742	71	-974
13057	-3254	-4424	1705
15946	5706	-4851	3019
14162	-4142	5514	2843
[illegible]	1845	-6684	2888
13714	2374	7838	3857
13295	1663	8293	4073
[illegible]	-4152	3403	1421
10942	5386	2222	950
10532	-6385	-1750	1925
10273	-5972	-1534	643
10605	-4782	-1695	27
10988	5153	1123	-341
11629	5884	-1460	48
10441	-4645	-2431	311
10788	3595	-4171	1807
12110	-5686	2127	976
11746	-4773	-2639	691
11541	5299	3031	1732
11416	2559	5359	2198
11583	5376	704	677
10416	-3214	-3516	872
9831	-5435	-1618	3255
9973	-5133	-986	3923
11707	-4643	-430	796
10994	2709	3587	2302
10716	5118	-665	270
14160	-10314	1095	1531

12944	-8049	1105	-741
13276	-7035	-511	274
14008	-7254	-283	139
11594	-6536	-91	1671
11732	-8645	746	15
14613	-7085	-1578	1183
13083	-6224	-750	-4
13988	-6256	-1592	820
14678	-8683	441	126
15571	-8872	-521	1139
15642	-9533	341	697
15960	-9586	-168	1121
15464	-10239	1433	-1
14934	-7887	-1046	1080
15252	-7630	-1899	1628
15485	-8384	-1234	1484
15962	-8638	-1815	1931
16501	-10664	398	1167
16146	-10145	411	918
14573	-7475	-697	601
14302	-7996	28	257
14769	-6792	-2286	1574
14144	-6137	-2169	1257
14770	-6271	-3111	1933
14110	-8312	1083	-531
15235	-6991	-2993	2174
13222	-5805	547	-891
14796	-8762	1254	-246
16040	-9181	-1005	1551
16487	-10086	-373	1420
15077	-9479	966	51
13026	-6468	932	-1080
12703	-6152	33	-573
15641	-6810	-4128	2874
13282	-7673	1583	-1283
12373	-7150	1512	-917
12992	-7751	-678	783
10907	-6858	-313	2597
13026	-8963	125	2152
12770	9946	1957	-505
12482	6849	1268	833
13790	-6181	-138	-279
12709	-8382	2044	227
12244	-6630	293	-457
14209	-6816	-1032	632
15134	-8267	-288	640
13619	-6157	1090	356
14044	-7413	725	-484
12958	-7753	2585	-1980
13188	-8396	2306	-1558
14379	-9980	2132	-688
14275	-9857	1162	179
13690	-8648	1621	-889
11770	-6829	-746	278
12732	-8202	286	90
13630	-10146	1867	-207
12072	-8740	1299	-645
12852	-9492	1226	62
11792	-7382	-54	-116
13779	-9014	487	351
11951	-7729	121	834
11970	-9781	2276	-4
12680	-7984	2787	-787
13300	-14488	6408	-1927
13635	-15355	9153	-3073
12804	-13564	5517	-1625
16624	10854	1690	28
20387	-18532	6162	-261
16515	-12642	3392	-519
15800	-11095	2151	-202

16824	-11790	1651	599
17604	-13213	2563	538
17892	-14177	3562	147
16987	-11399	869	1052
17003	-12456	2442	265
21657	-21806	9198	-1250
16825	-13341	3980	-686
17525	-12714	1887	805
16419	-11034	1716	617
20931	-19939	7469	-684
18452	-15390	4573	-191
14778	-10077	2841	-1209
17402	-13319	3042	160
19365	-17922	7087	-1061
16298	-11941	2810	-351
19087	-16176	4775	-84
17666	-12289	938	1224
18581	-15894	5132	-430
19823	16717	4142	545
19960	-19423	8400	-1492
18973	-16817	5906	-594
19079	-15431	3528	503
16667	-12485	4467	-1302
19791	-17797	6196	-529
20005	-17606	5354	-20
20123	-18599	6886	-728
19068	-14805	2394	1105
14443	-13723	5631	-2029
14730	-14231	5631	-1450
16089	-15959	7271	-2029
13473	-11200	3236	-924
14413	-10902	2347	-267
17666	-18662	11381	-3496
14749	-11042	3305	-275
15304	-10486	1869	-240
14809	-12126	3369	-616
16896	-16561	7307	-1845
15782	-14336	5380	-1264
16395	-15520	6415	-1588
13681	11114	2584	-320
14244	12326	4480	-1632
15247	-13119	4265	-898
13987	-12091	3469	-597
13941	-12770	4240	-839
13771	-13627	5252	-1384
15010	-16074	7592	-2249
15852	-17226	8619	-2655
18921	-16916	6875	-1501
14909	-11678	2768	-795
18988	-18353	8424	-2070
15457	-15080	6218	-1513
14916	-15512	6949	-1883
18108	-14702	4681	-701
17600	-15733	5616	-775
14070	-13683	6472	-2626
13832	-11914	5201	-2232
18846	-19009	9192	-1961
-11981	-10994	-6324	-2264
-10976	-9047	-6546	-3828
-11288	-10532	-7014	-4191
-10139	-10189	-7799	-2688
-10555	-9988	-9181	-2040
-11598	-11339	-10022	-2707
-13400	-13395	-11308	-4206
-9774	-12281	-7466	-4133
-10842	-13125	-8777	-4956
-11964	-15082	-9779	-5095
-9382	-10188	-9053	-4927
-11562	-11296	-3651	-985
-9287	-10083	-7918	-4069

-12847	-4496	2984	1123
-13860	-7915	-1166	-547
-12276	-8145	-2290	-1527
-11417	-4830	2933	1854
-11793	-6002	1163	1940
11443	-4920	-3235	3151
11300	-6616	-1506	1175
9198	-4628	-2060	2390
10532	-4027	-643	912
9902	-3573	-1606	1327
9653	-3536	-2240	1869
9948	-5171	-423	2662
12316	-4004	-1989	281
12125	-4800	-1265	-163
10650	-2617	-2337	1462
9909	-4968	-2376	916
12944	-4647	-1958	460
12988	-5283	-1141	41
12321	-2915	-3621	1025
11449	-2894	-2728	351
12087	-3041	-2002	-32
11558	-4031	-1343	-399
12983	-3740	-3516	1245
12999	-2515	-2752	225
12515	-3465	-2701	550
14683	-5022	-52[illegible]	2996
12260	-3383	-12 5	-528
13810	-5422	-2443	1166
13421	-5378	-1886	721
12961	-4259	-2594	796
12266	-2104	-4768	1591
13523	-4710	-3045	1342
12437	-2099	5610	2117
11850	-2183	3497	661
12275	-3936	-597	-697
12459	-5253	-517	-544
12835	-4094	-1322	-168
14360	-5677	-3305	1859
13905	-4552	-4309	2117
[illegible]	3412	1847	81
[illegible]	3167	[illegible]	2746
11910	1634	-4342	1052
12662	-4742	-71	974
13057	-3254	-4424	1705
15446	5706	-4851	3019
14162	-4142	5514	2843
12764	1845	-6684	2888
13714	2374	7838	3857
13295	1663	8293	4073
10032	-4152	3403	1421
10442	5386	2222	950
10532	-6385	-1750	1925
10273	-5972	-1534	643
10695	-4782	-1695	27
10488	5153	1123	341
11629	5884	1460	48
10641	-4645	-2431	311
10788	3595	-4171	1807
12110	-3686	-2127	976
11746	-4773	-2639	691
11541	-5299	3031	1732
11416	2559	-5359	2198
11583	-5376	704	677
10616	-3214	-3516	872
9651	-5435	-1618	3255
9973	-5133	-986	3923
11707	-4643	-430	798
10994	2709	-3587	2302
10716	5118	-665	270
14160	-10314	1095	1531

12944	-8049	1105	-741
13276	-7035	-511	274
14008	-7254	-283	139
11594	-6536	-91	1671
11732	-8645	746	15
14613	-7085	-1578	1183
13083	-6224	-750	-4
13988	-6256	-1592	820
14678	-8683	441	126
15571	-8872	-521	1139
15642	-9533	341	697
15960	-9586	-168	1121
15464	-10239	1433	-1
14934	-7887	-1046	1080
15252	-7630	-1899	1628
15485	-8384	-1234	1484
15962	-8638	-1815	1931
16501	-10664	398	1167
16146	-10145	411	918
14573	-7475	-697	601
14302	-7996	28	257
14769	-6792	-2286	1574
14144	-6137	-2169	1257
14770	-6271	-3111	1933
14110	-8312	1083	-531
15235	-6991	-2993	2174
13222	-5805	547	-891
14796	-8762	1254	-246
16040	-9181	-1005	1551
16487	-10086	-373	1420
15077	-9479	966	51
13026	-6468	932	-1080
12703	-6152	-33	-573
15641	-6810	-4128	2874
13282	-7673	1583	-1283
12373	-7150	1512	-917
12992	-7751	-678	783
10907	-6858	-313	2597
13026	-8963	125	2152
12770	9946	1957	-505
12482	6849	1268	833
13790	-6181	-138	-279
12709	-8382	2044	227
12244	-6630	293	-457
14209	-6816	-1032	632
15134	-8267	288	640
13619	-6157	1090	356
14044	-7413	725	-484
12958	-7753	2585	-1980
13188	-8396	2306	-1558
14379	-9980	2132	-688
14275	-9857	1162	179
13690	-8648	1621	-889
11770	-6829	-746	278
12732	-8202	286	90
13630	-10146	1867	-207
12072	-8740	1299	-645
12852	-9492	1226	62
11792	-7382	54	-116
13779	-9014	487	351
11951	-7729	121	834
11970	-9781	2276	-4
12680	-7984	2787	-787
13300	-14488	6408	-1927
13635	-15355	9153	-3073
12804	-13564	5517	-1625
16624	10854	1690	28
20387	-18532	6162	-261
16515	-12642	3392	-519
15800	-11095	2131	-202

16824	-11790	1651	599
17604	-13213	2563	538
17892	-14177	3562	147
16987	-11399	869	1052
17003	-12456	2442	265
21657	-21806	9198	-1250
16825	-13341	3980	-686
17525	-12714	1887	805
16419	-11034	1216	617
20931	-19939	7469	-684
18452	-15390	4573	-191
14778	-10077	2841	-1209
17402	-13319	3042	160
19365	-17922	7087	-1061
16298	-11941	2810	-351
19087	-16176	4775	-84
17666	-12289	938	1224
18581	-15894	5132	-430
19823	-16717	4142	545
19960	-19423	8400	-1492
18973	-16817	5906	-594
19079	-15431	3528	503
16667	-12485	4467	-1302
19791	-17797	6196	-529
20005	-17606	5354	-20
20123	-18599	6886	-728
19068	-14805	2394	-1105
14443	-13723	5631	-2029
14730	-14231	5631	-1450
16089	-15959	7271	-2029
13473	-11200	3236	-924
14413	-10902	2347	-267
17666	-18662	11381	-3496
14749	-11042	3305	-275
15304	-10486	1869	-240
14809	-12126	3369	-616
16896	-16561	7307	-1845
15782	-14336	5380	-1264
16395	-15520	6415	-1588
13681	-11114	2584	-320
14244	12326	4480	-1632
15247	-13119	4265	-898
13987	-12091	3469	-597
13941	-12770	4240	-839
13771	-13627	5252	-1384
15010	-16074	7592	-2249
15852	-17226	8619	-2655
18921	-16916	6875	-1501
14909	-11678	2768	-705
18988	-18353	8424	-2070
15457	-15080	6218	-1513
14916	-15512	6949	-1883
18108	-14702	4681	-701
17600	-15733	5616	-775
14070	-13683	6472	-2626
13832	-11914	5201	-2232
18846	-19009	9192	-1961
-11981	-10994	-6324	-2264
-10976	-9047	-6546	-3828
-11288	-10532	-7014	-4191
-10139	-10189	-7799	-2688
-10555	-9988	-9181	-2040
-11596	-11339	-10022	-2707
-13400	-13395	-11308	-4206
-9774	-12281	-7466	-4133
-10842	-13125	-8777	-4956
-11964	-15082	-9779	-5095
-9382	-10188	-9053	-4927
-11562	-11296	-3651	-985
-9287	-10083	-7918	-4069

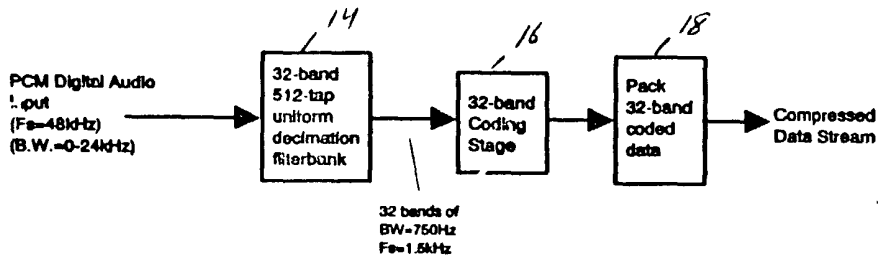

FIG 1 Encoding of Standard sampling rate(48kHz) digital audio using 32-band coding for frequencies 0-24kHz

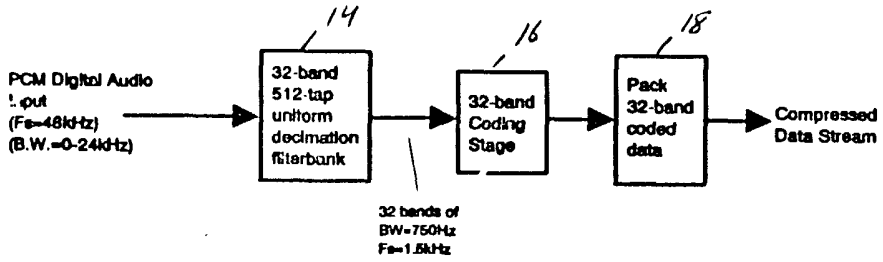

FIG 1 Encoding of Standard sampling rate(48kHz) digital audio using 32-band coding for frequencies 0-24kHz

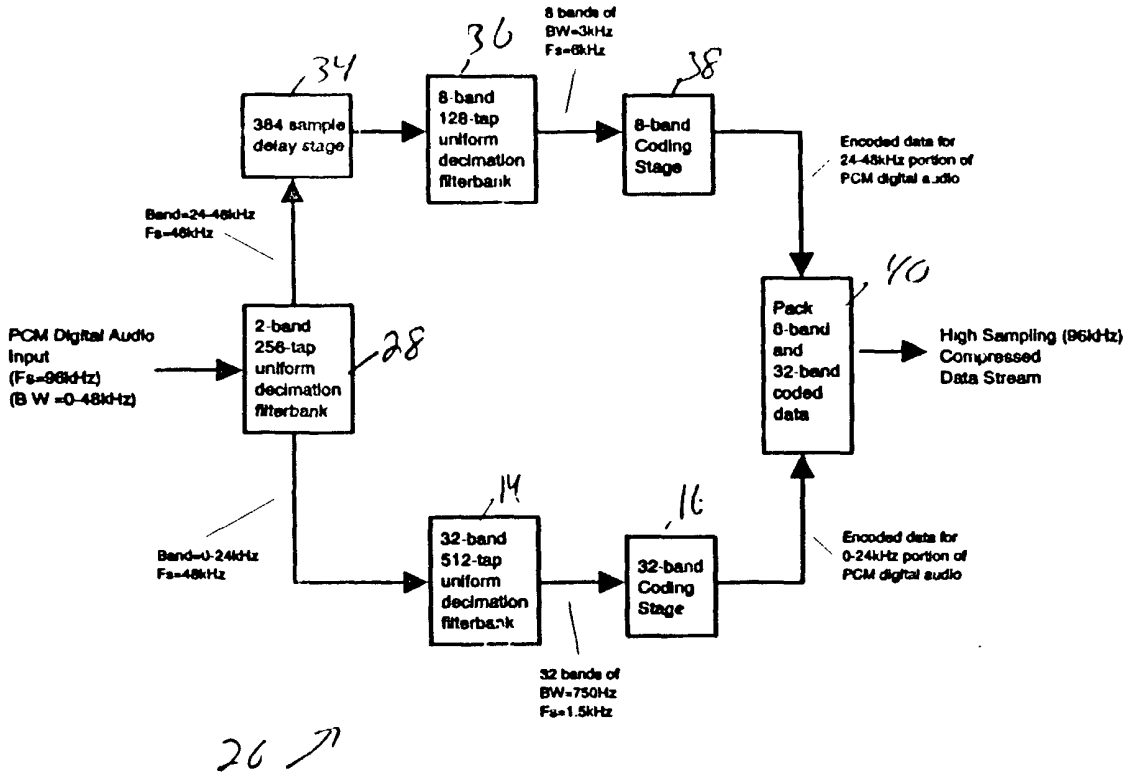

FIG 3 Encoding of High Sampled (96kHz) digital audio using 32-band coding for frequencies 0-24kHz and 8-band coding for frequencies 24-48kHz

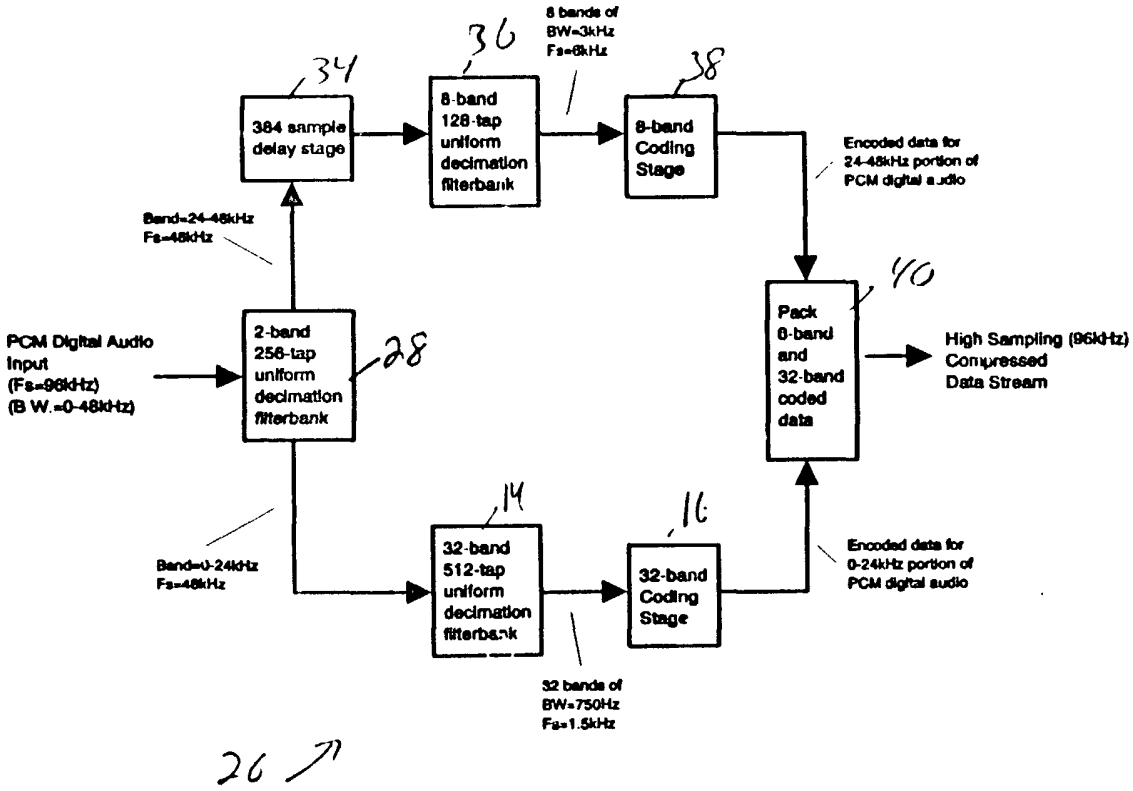

FIG 3 Encoding of High Sampled (96kHz) digital audio using 32-band coding for frequencies 0-24kHz and 8-band coding for frequencies 24-48kHz

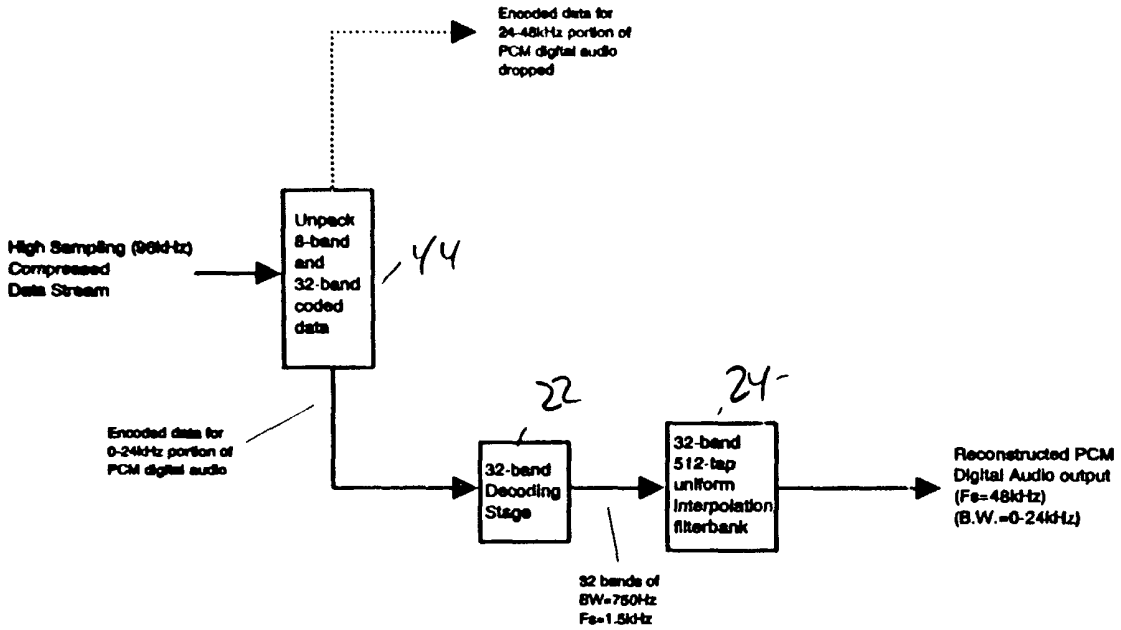

FIG 5 Decoding of High Sampled (96kHz)Compressed data stream using only 32-band decoding for 0-24kHz. audio

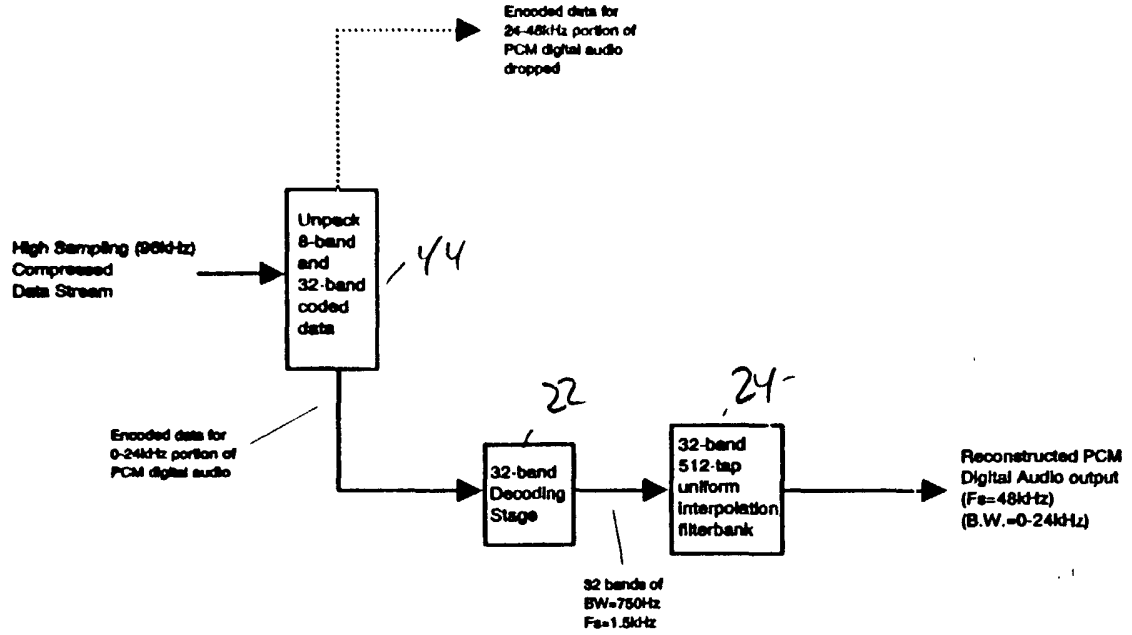

FIG 5 Decoding of High Sampled (96kHz)Compressed data stream using only 32-band decoding for 0-24kHz. audio

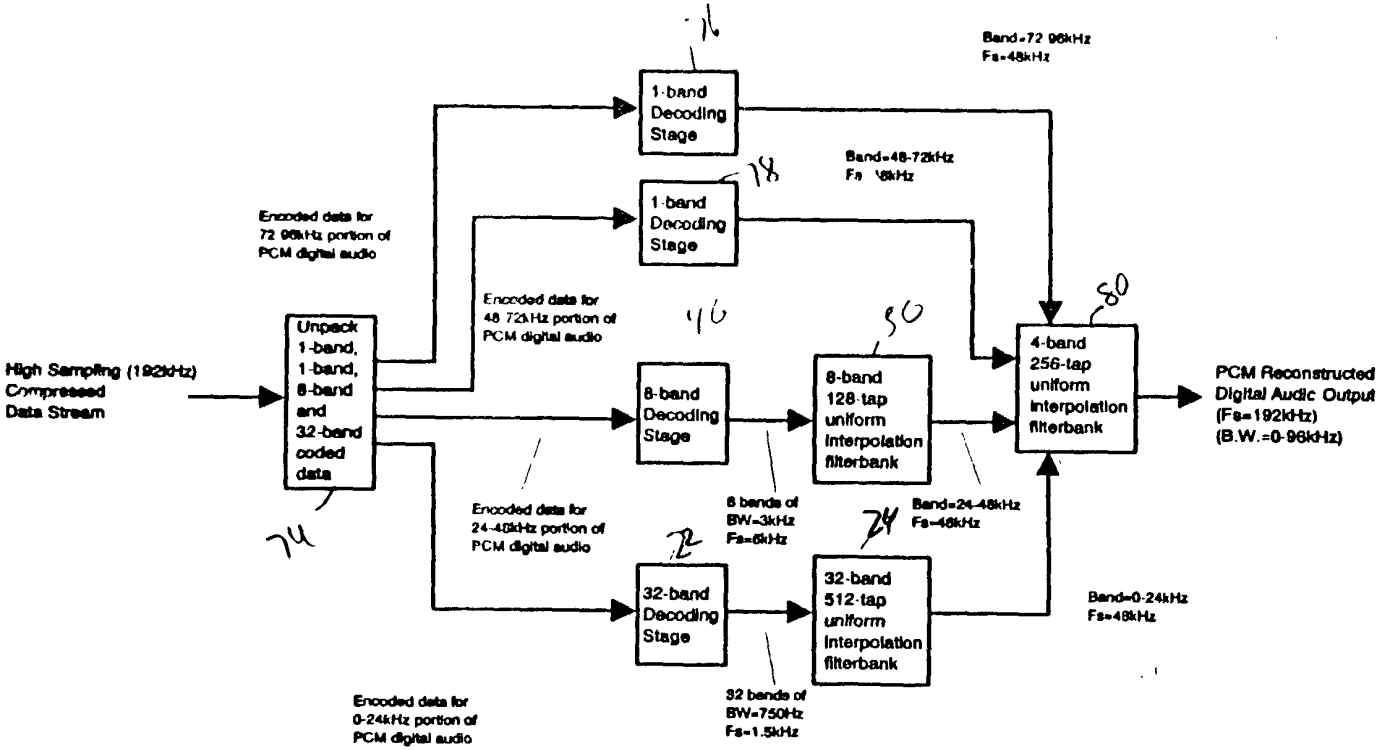

FIG 7 Decoding of High Sampled (192kHz) digital audio using 32-band decoding for frequencies 0-24kHz, 8-band decoding for frequencies 24-48kHz, 1-band decoding for 48kHz-72kHz frequencies and 1-band decoding for 72-kHz-96kHz frequencies.

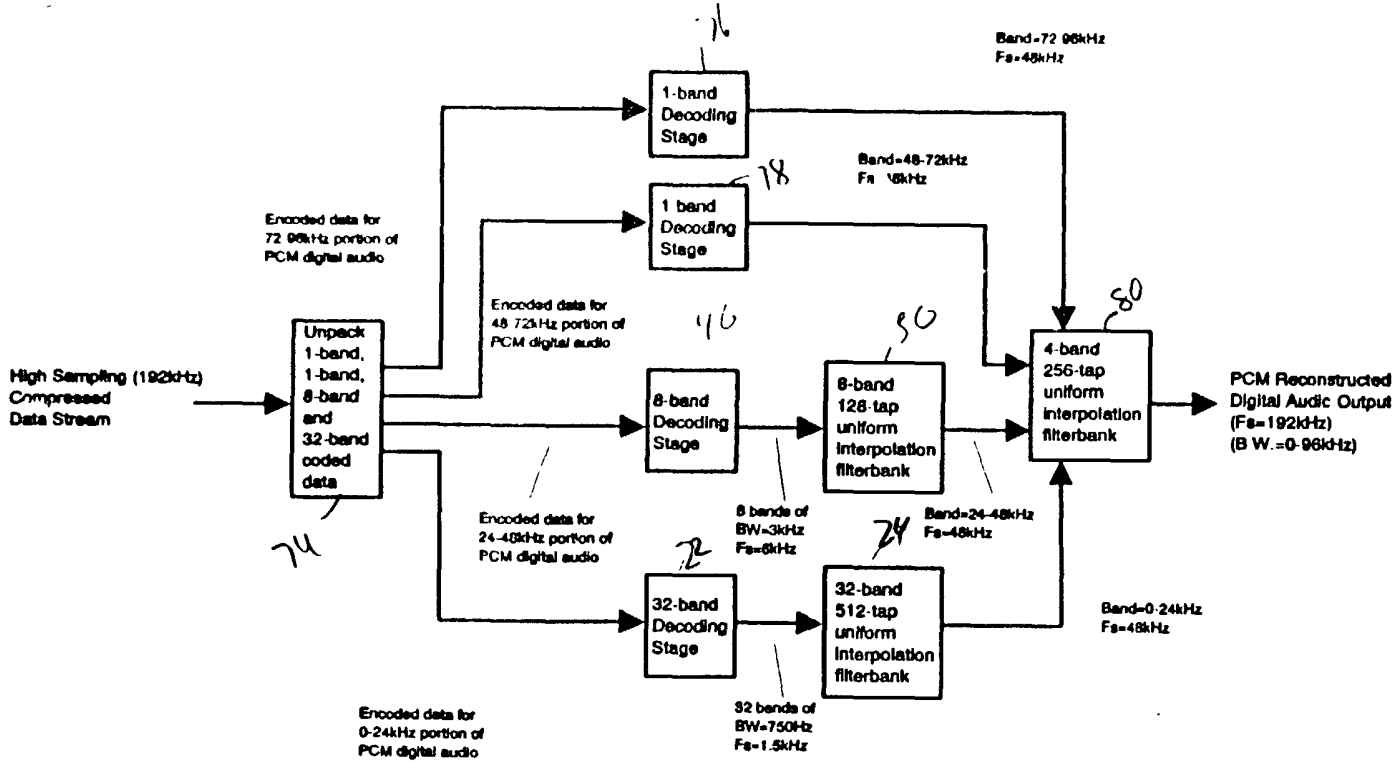

FIG 7 Decoding of High Sampled (192kHz) digital audio using 32-band decoding for frequencies 0-24kHz, 8-band decoding for frequencies 24-48kHz,1-band decoding for 48kHz-72kHz frequencies and 1-band decoding for 72-kHz-96kHz frequencies.

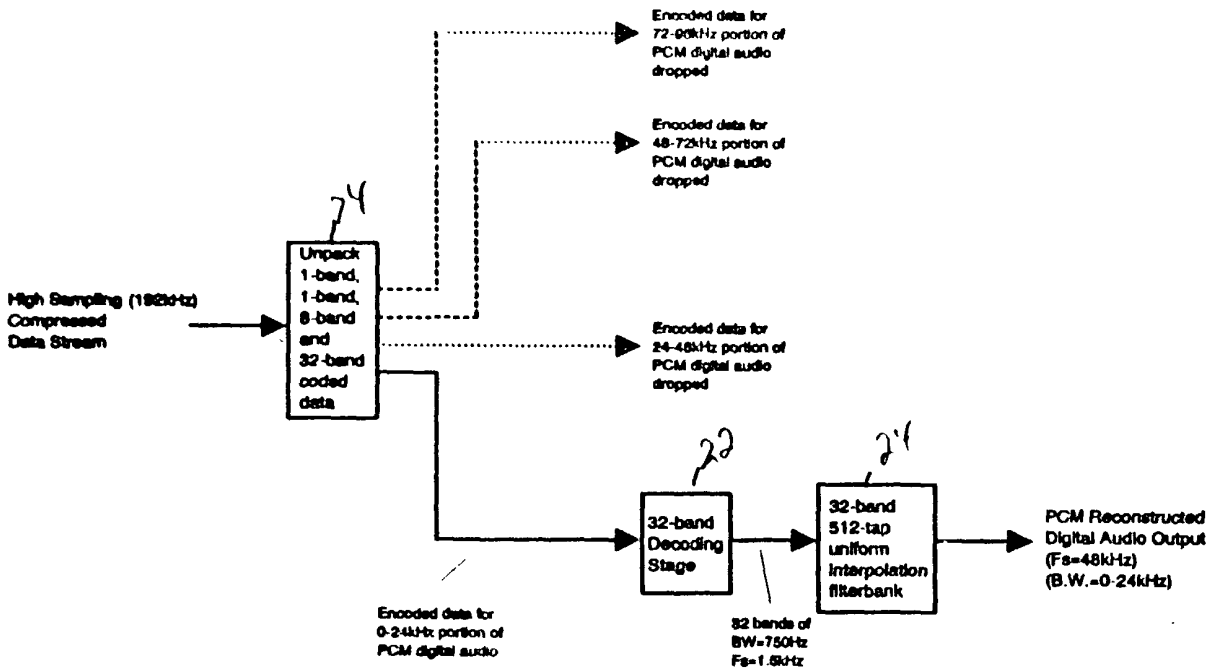

FIG 9 Decoding of High Sampled (192kHz) digital audio using only 32-band decoding for frequencies 0-24kHz, for playback of digital audio at Fs=48kHz.

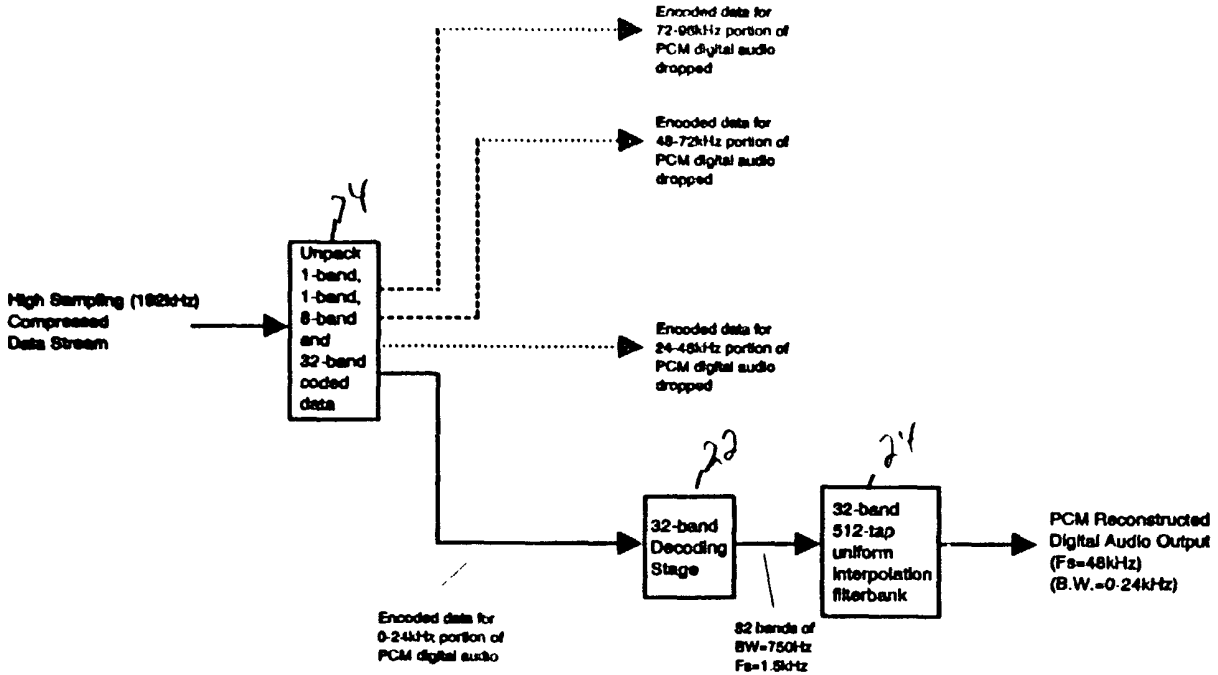

FIG 9 Decoding of High Sampled (192kHz) digital audio using only 32-band decoding for frequencies 0-24kHz, for playback of digital audio at Fs=48kHz.

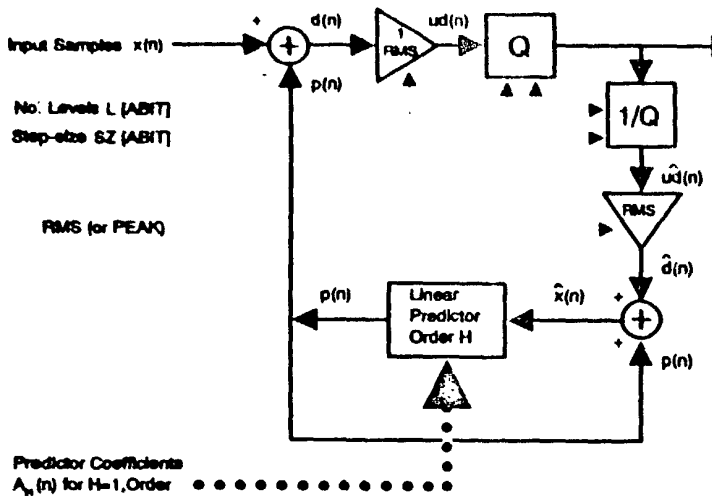

1. $p(n) = SUM [\hat{x}(n-l) * A_l(n)]$ for l=1...H
2. $d(n) = x(n) - p(n)$
3. $ud(n) = d(n) * 1/RMS$ (or 1/LEVEL)
4. $QL(n) = Q_{sz}[ud(n)]$
5. $\hat{ud}(n) = 1/Q_{sz}[QL(n)]$
6. $\hat{d}(n) = \hat{ud}(n) * RMS$ (or PEAK)
7. $\hat{x}(n) = p(n) + \hat{d}(n)$

FIG 11 Forward Adaptive Differential PCM Encoding Block

-90

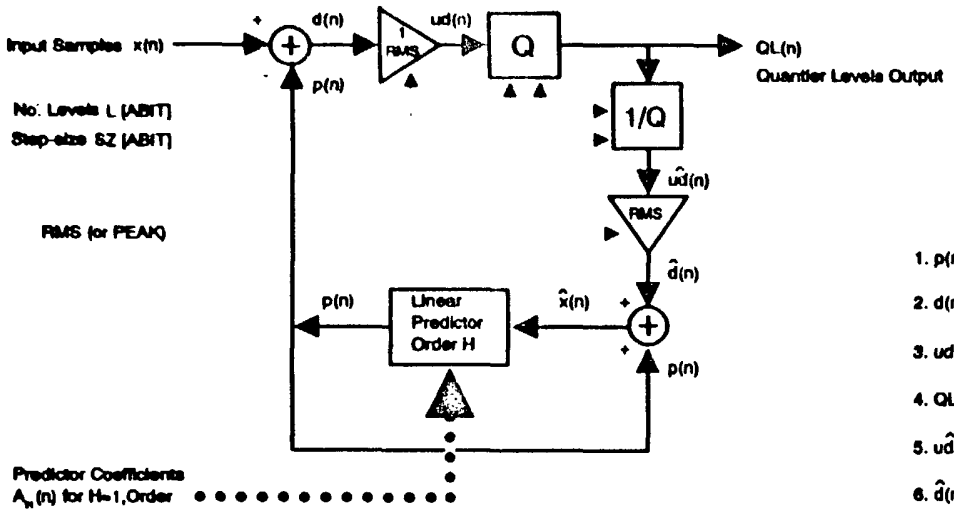

1. $p(n) = \text{SUM}\,[\,\hat{x}(n-i)*A_i(n)\,]$ for $i=1,..H$
2. $d(n)=x(n)-p(n)$
3. $ud(n)=d(n)*1/RMS$ (or 1/LEVEL)
4. $QL(n)=Q_{L_{sz}}[ud(n)]$
5. $u\hat{d}(n)= 1/Q_{L_{sz}}[QL(n)]$
6. $\hat{d}(n)=u\hat{d}(n)*RMS$ (or PEAK)
7. $\hat{x}(n)=p(n)+\hat{d}(n)$

FIG 11 Forward Adaptive Differential PCM Encoding Block

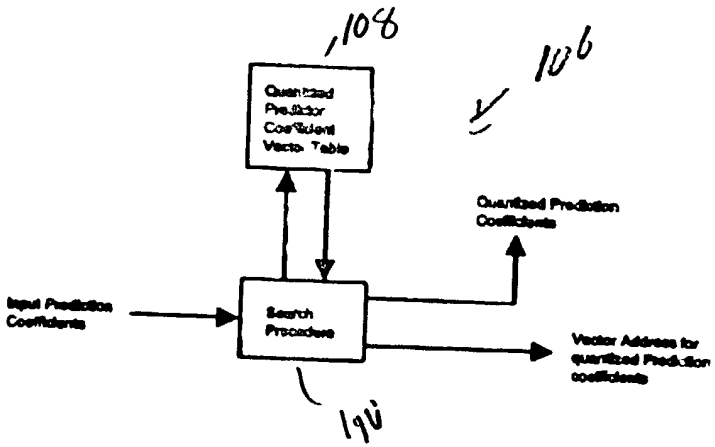

FIG 13

Quantization of Predictor Coefficients using Vector Quantization using weighted minimum mean squared error search procedure directly on coefficient values

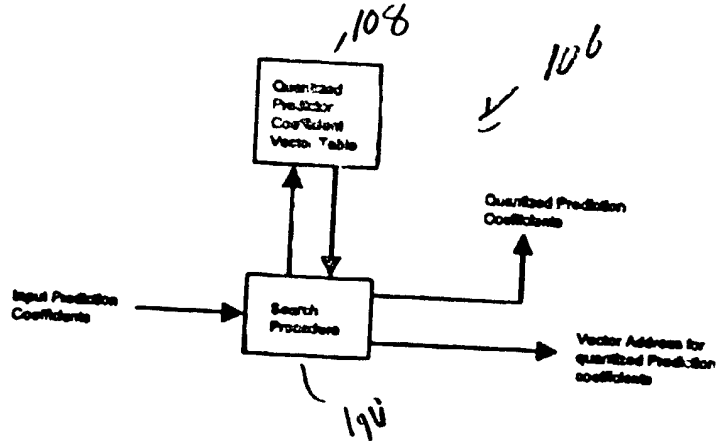

FIG 13

Quantization of Predictor Coefficients using Vector Quantization using weighted minimum mean squared error search procedure directly on coefficient values

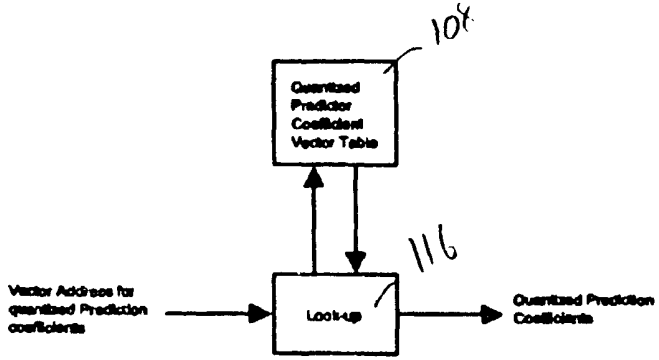

EXHIBIT
FIG 15 Inverse Quantization of Predictor Coefficents at Decoder using Vector Quantization look-up procedure

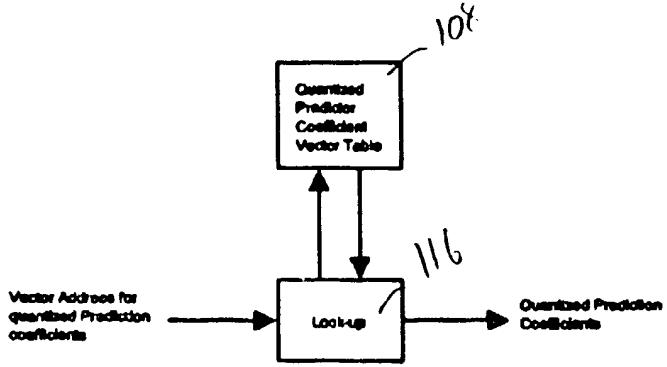

FIGURE 15
Inverse Quantization of Predictor Coefficents at Decoder using Vector Quantization look-up procedure

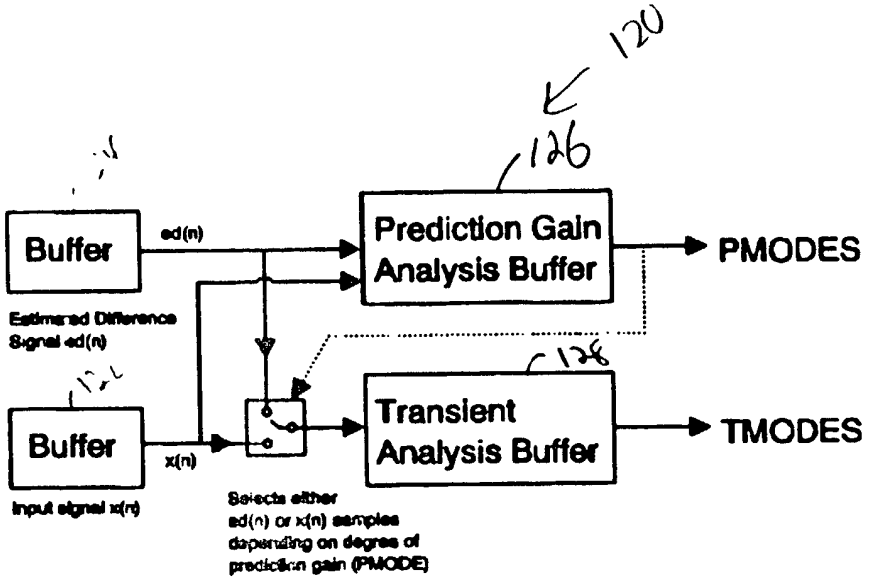

FIG 7 Y
FIG 17

Calculation of Prediction Modes (PMODE) at encoder followed by calculation of Transient Modes (TMODE), using ed(n) and input x(n) sample buffers

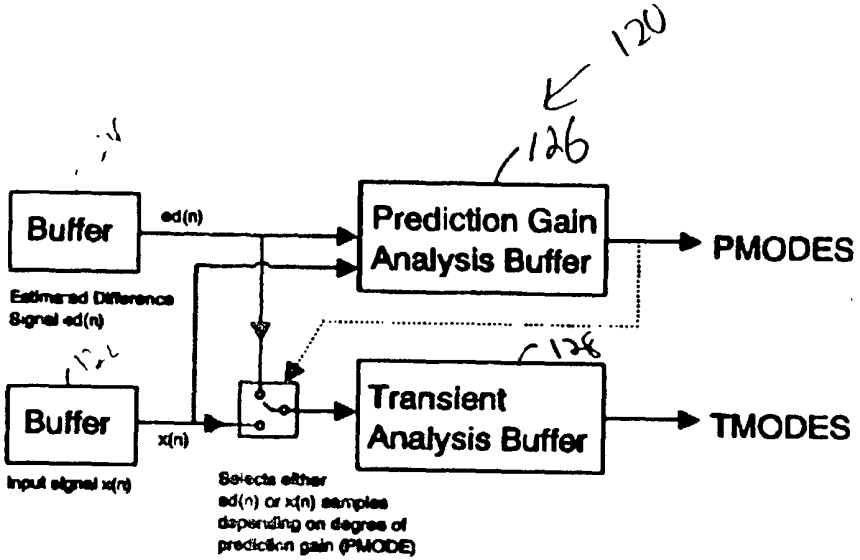

FIG 7 Y
FIG 17

Calculation of Prediction Modes (PMODE) at encoder followed by calculation of Transient Modes (TMODE), using ed(n) and input x(n) sample buffers

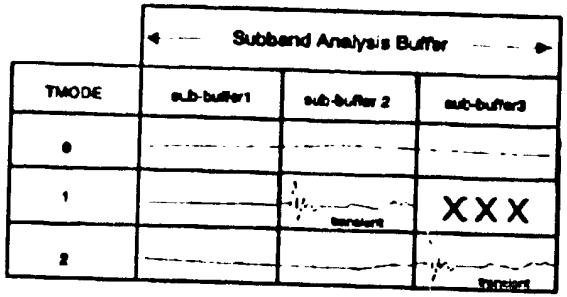

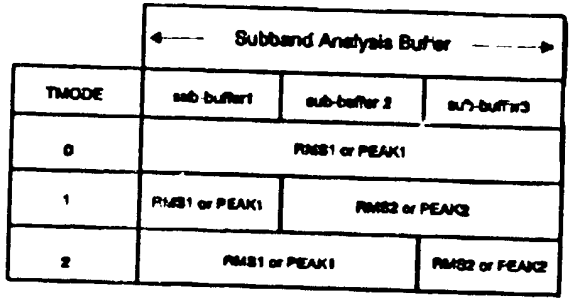

FIG 19

Calculation of Transient Mode (TMODE) for subband analysis buffer deploying 3 uniform sub-buffers and resulting grouping of sub-buffers for generation of scale factors values

	← Subband Analysis Buffer →		
TMODE	sub-buffer1	sub-buffer 2	sub-buffer3
0			
1		transient	XXX
2			transient

	← Subband Analysis Buffer →		
TMODE	sub-buffer1	sub-buffer 2	sub-buffer3
0	RMS1 or PEAK1		
1	RMS1 or PEAK1	RMS2 or PEAK2	
2	RMS1 or PEAK1		RMS2 or PEAK2

FIG 19

Calculation of Transient Mode (TMODE) for subband analysis buffer deploying 3 uniform sub-buffers and resulting grouping of sub-buffers for generation of scale factors values

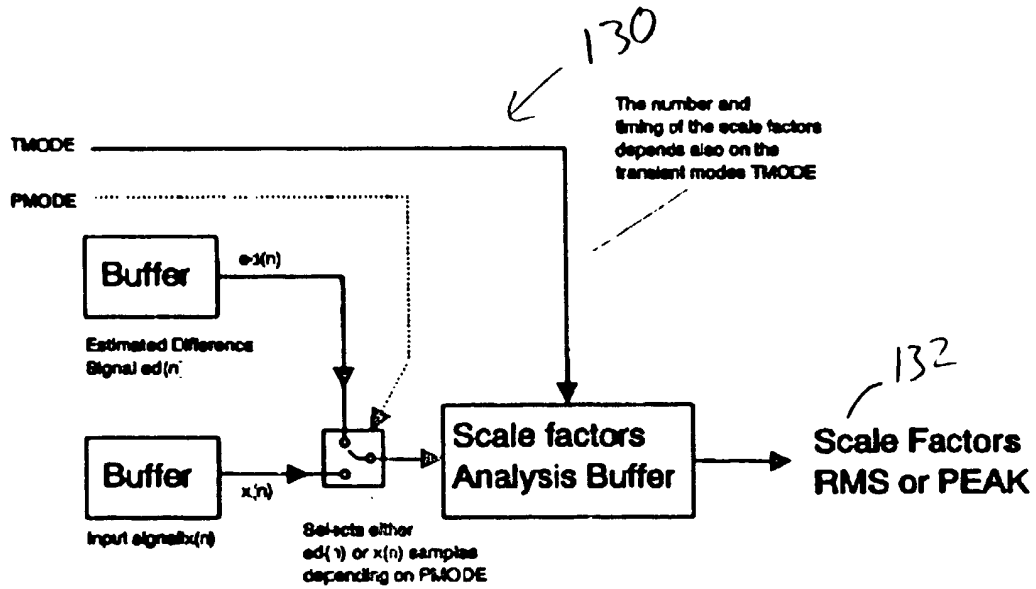

Fig 55
Fig 21a

Calculation of subband scale factors using estimated difference signal ed(n) or input samples x(n), depending on PMODE and TMODE

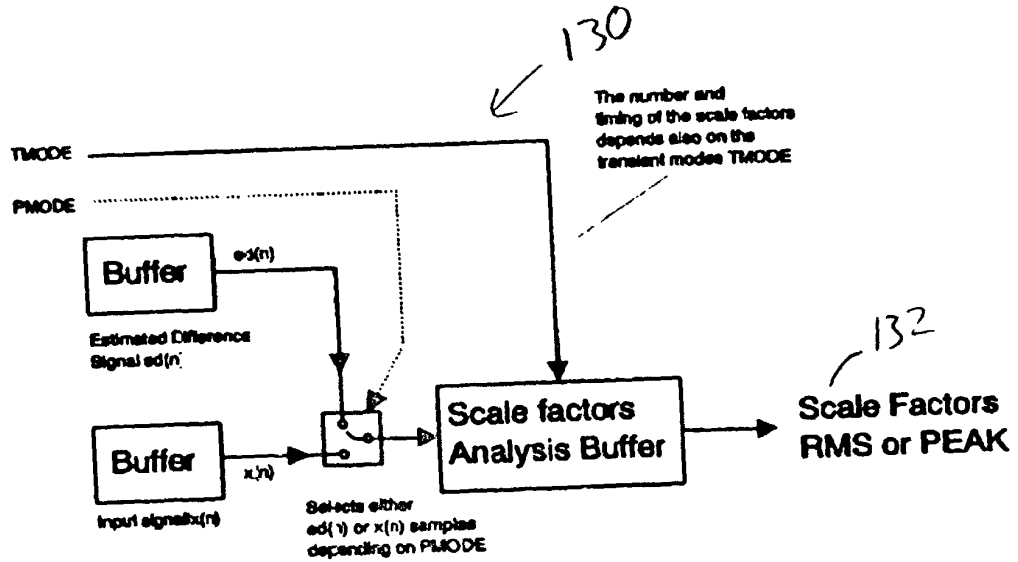

FIG 5S Calculation of subband scale factors using estimated difference signal ed(n) or input samples x(n), depending on PMODE and TMODE

FIG 21a

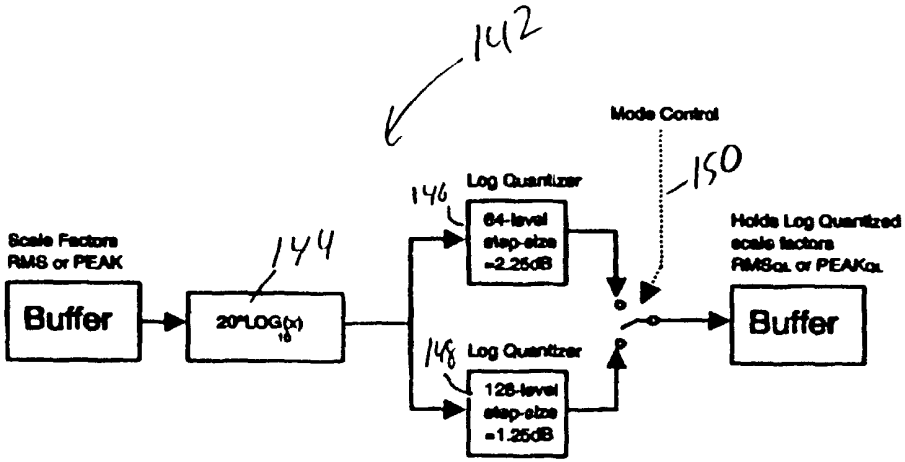

FIG 22 Quantization of subband scale factors RMS or PEAK using either 64-level or 128-level Log quantizer tables

22

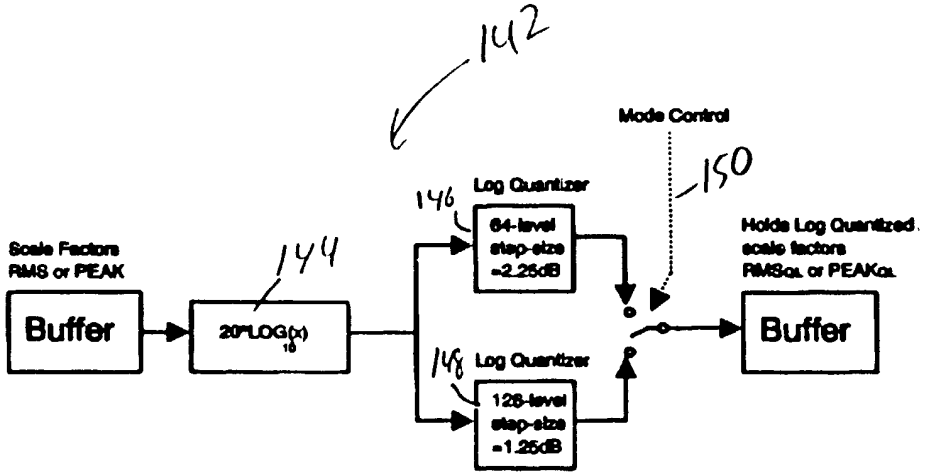

FIG 22 Quantization of subband scale factors RMS or PEAK using either 64-level or 128-level Log quantizer tables

22

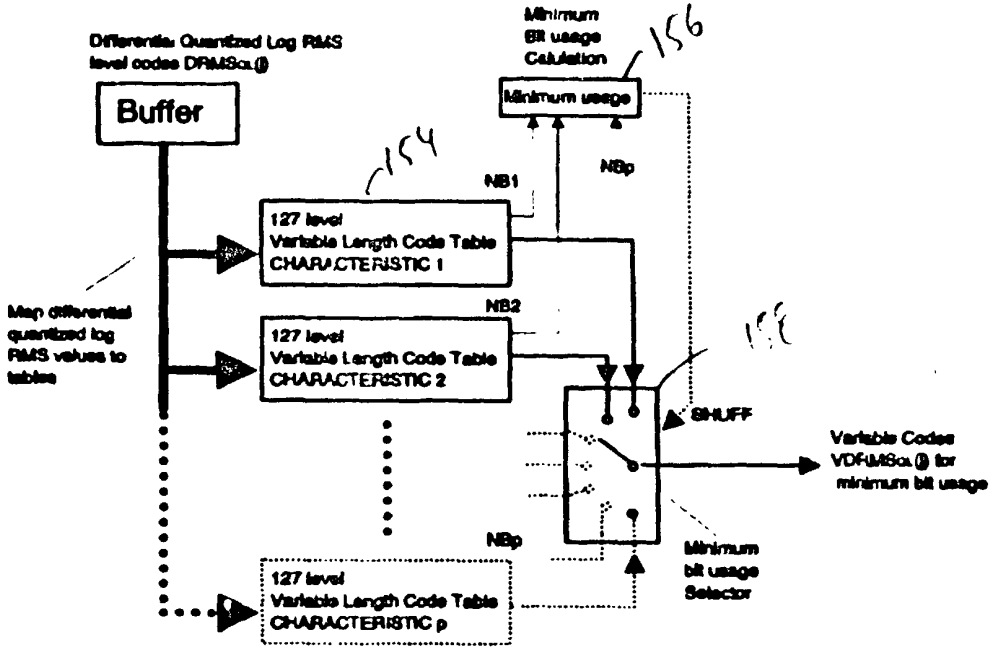

FIG 24

Mapping of differential Quantized Log RMS values DRMSα(j) over j subbands to variable length binary code tables VDRMSα(j) and selection of table (SHUFF) which produces minimum rms bit usage

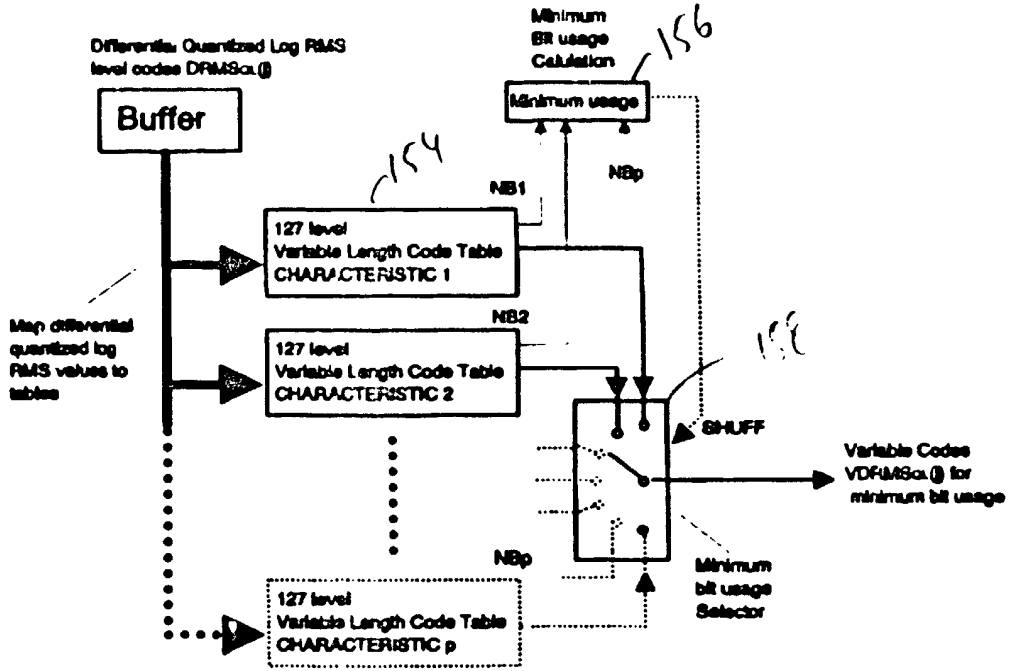

FIG 24

Mapping of differential Quantized Log RMS values DRMSα(j) over j subbands to variable length binary code tables VDRMSα(j) and selection of table (SHUFF) which produces minimum rms bit usage

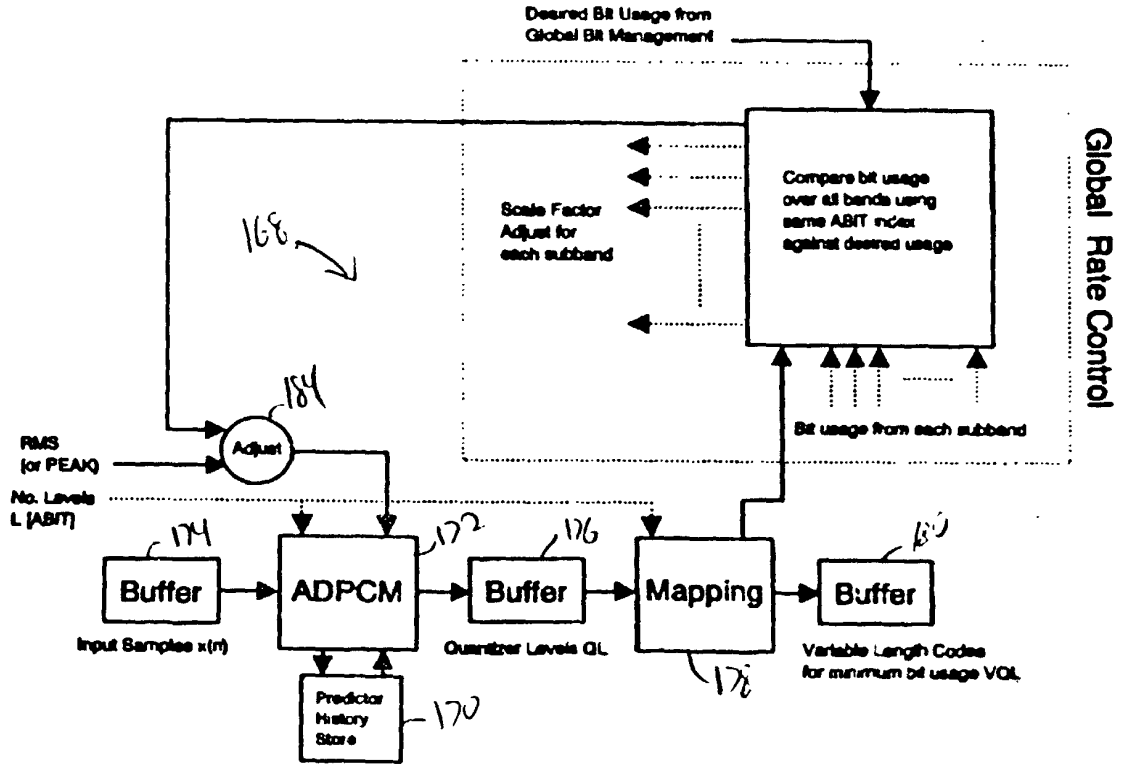

FIG 26 Bit rate Control of Entropy (Variable Length) ADPCM coding using quantizer Scale Factor Adjustments

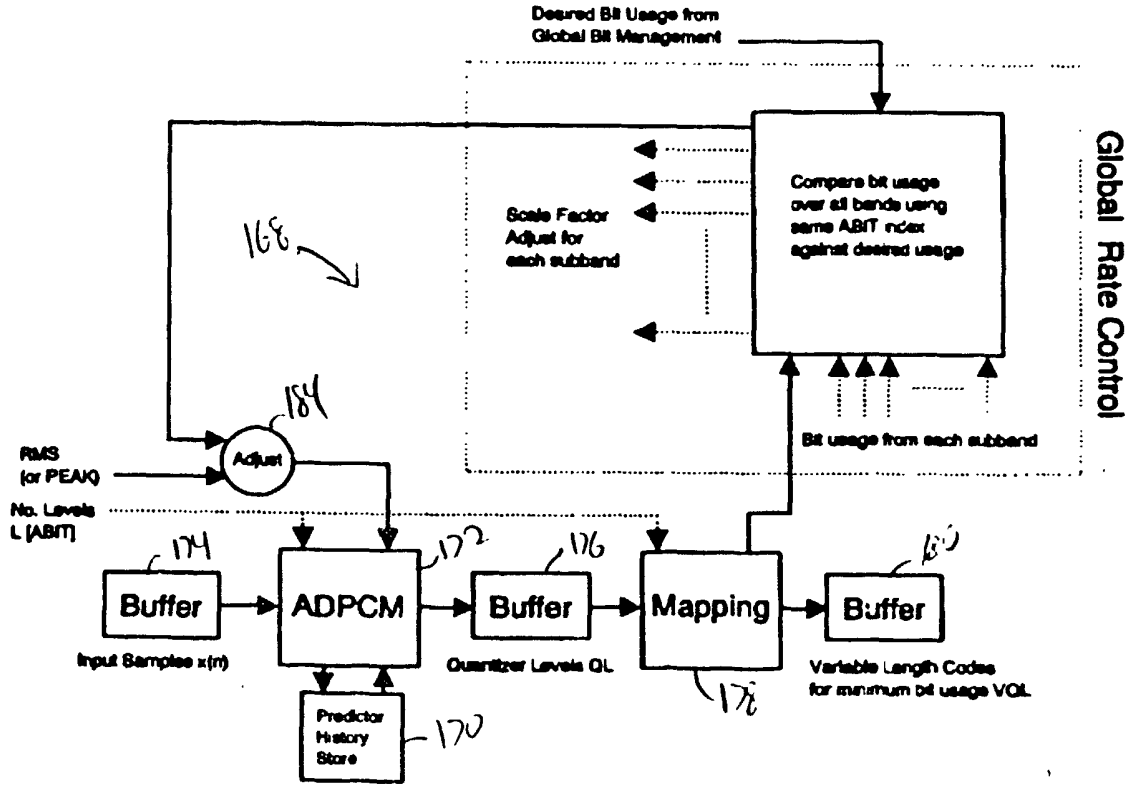

FIG 26 Bit rate Control of Entropy (Variable Length) ADPCM coding using quantizer Scale Factor Adjustments

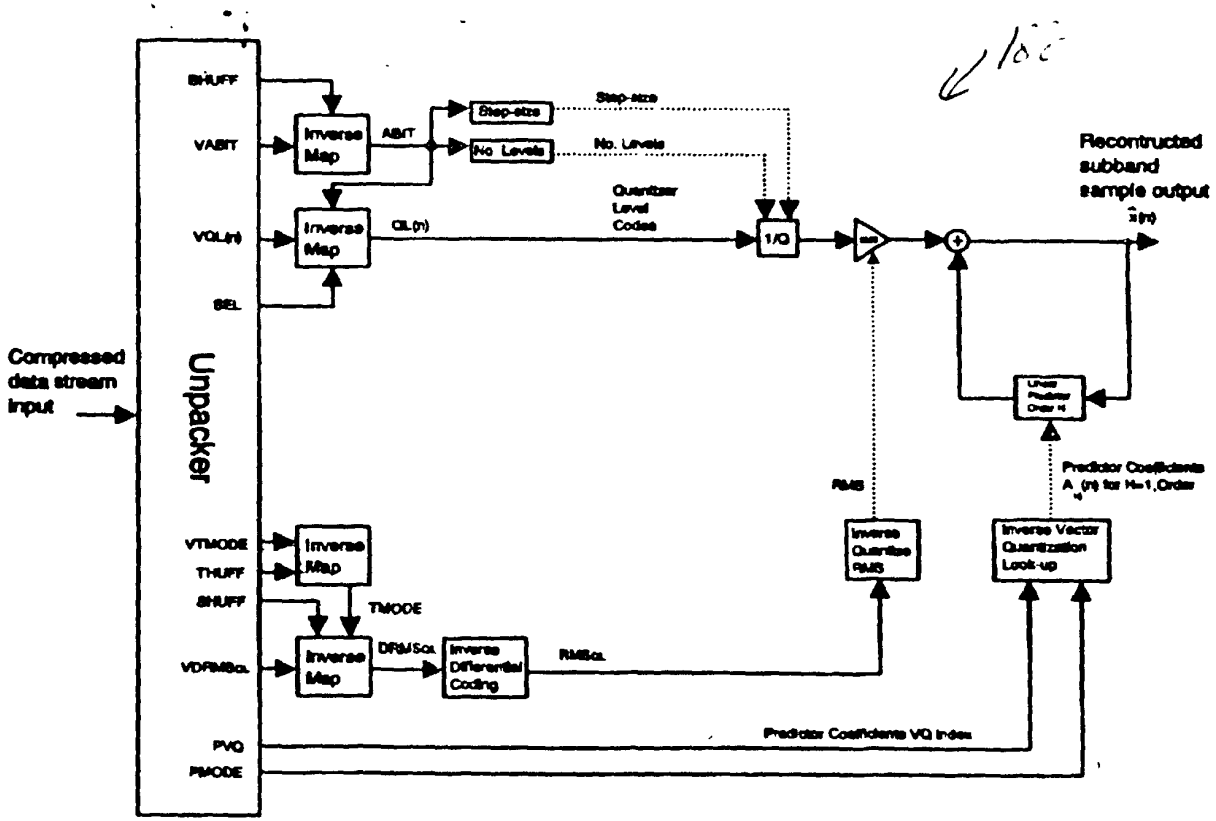

FIG 28

Main processes involved in ADPCM Decoding of single Subband using Entropy decoding for side information, differential codes and RMS scale factors

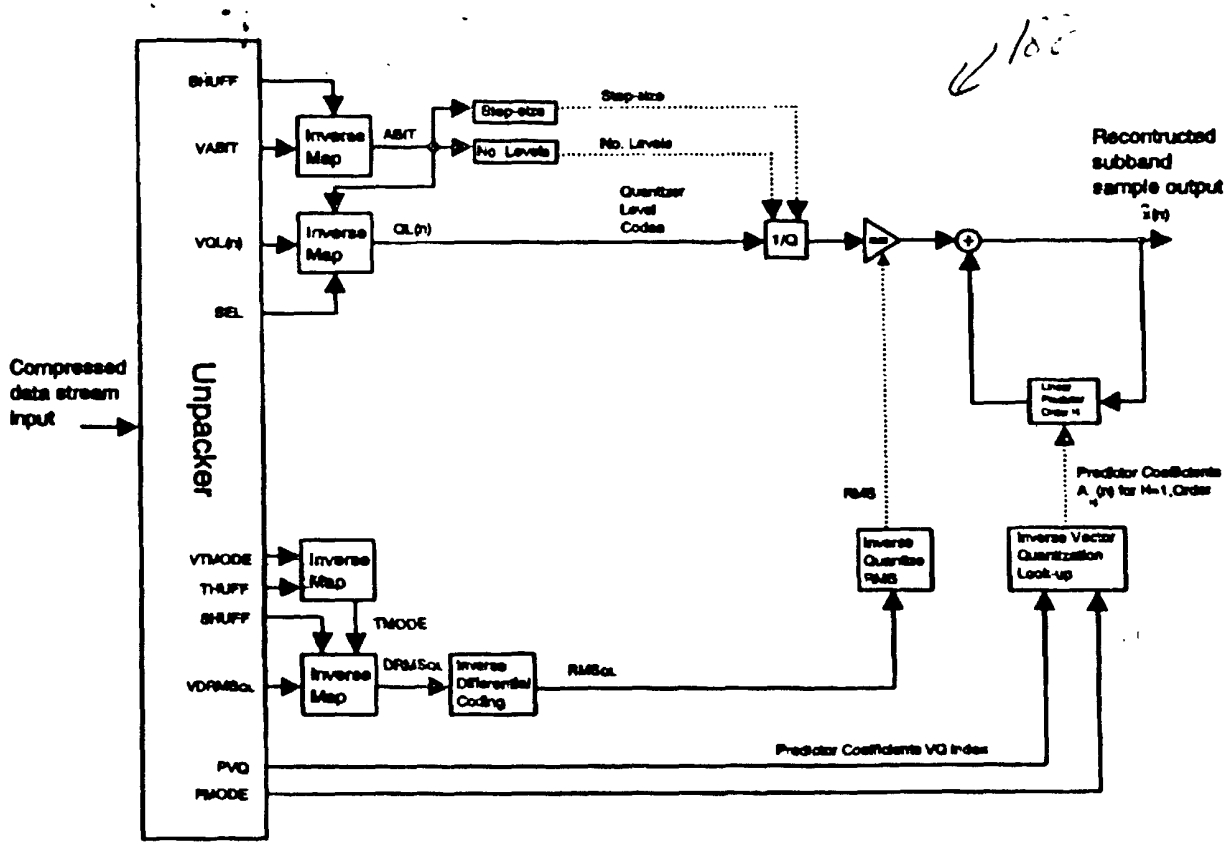

FIG 28

Main processes involved in ADPCM Decoding of single Subband using Entropy decoding for side information, differential codes and RMS scale factors

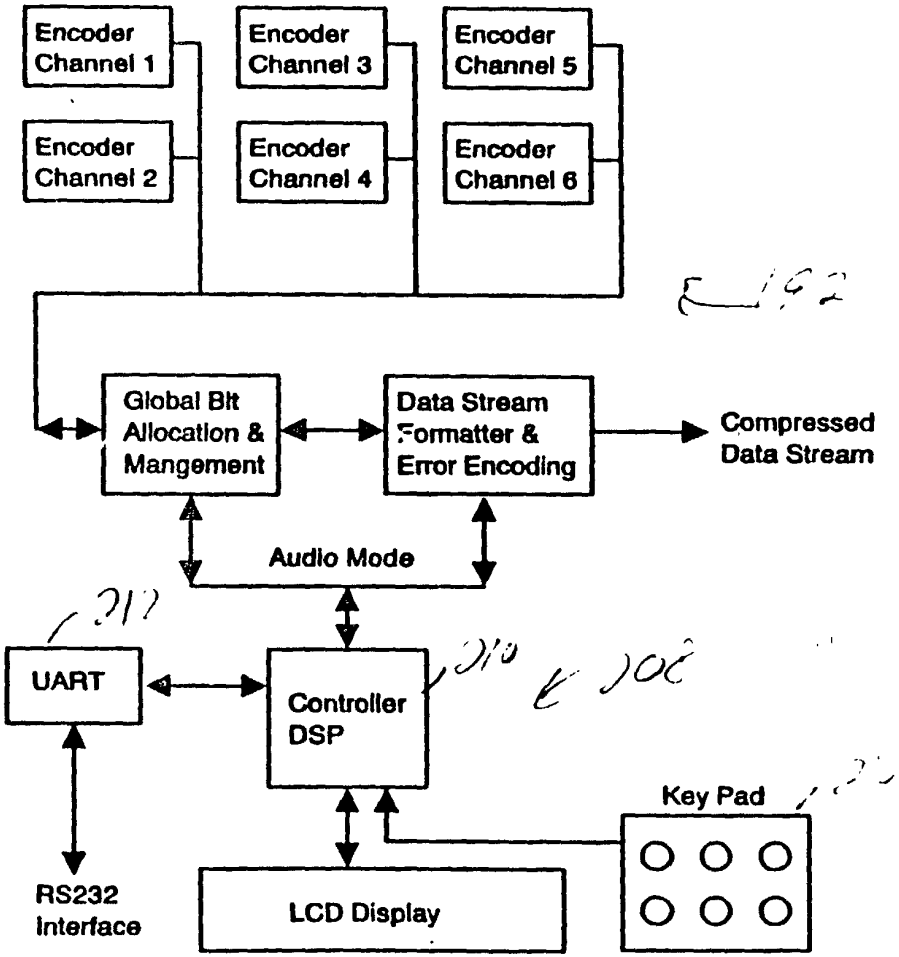

FIG. 30

DSP Mode Control Interfacing to 6-channel Perceptual ADPCM Real-time Encoder

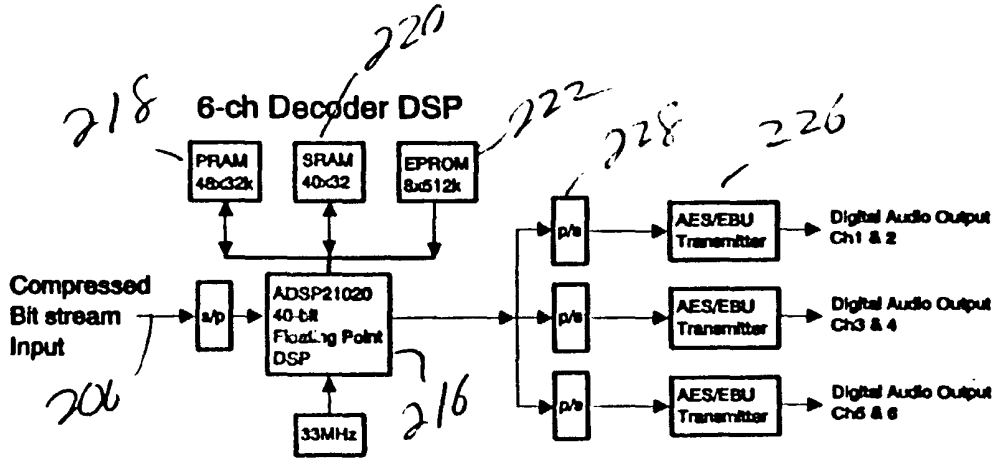

FIG. 3A

Single Chip Implementation of 6-channel Perceptual ADPCM Real-time Decoder

Fig32 Subband Sample Decoding Diagram for Coherent Acoustics

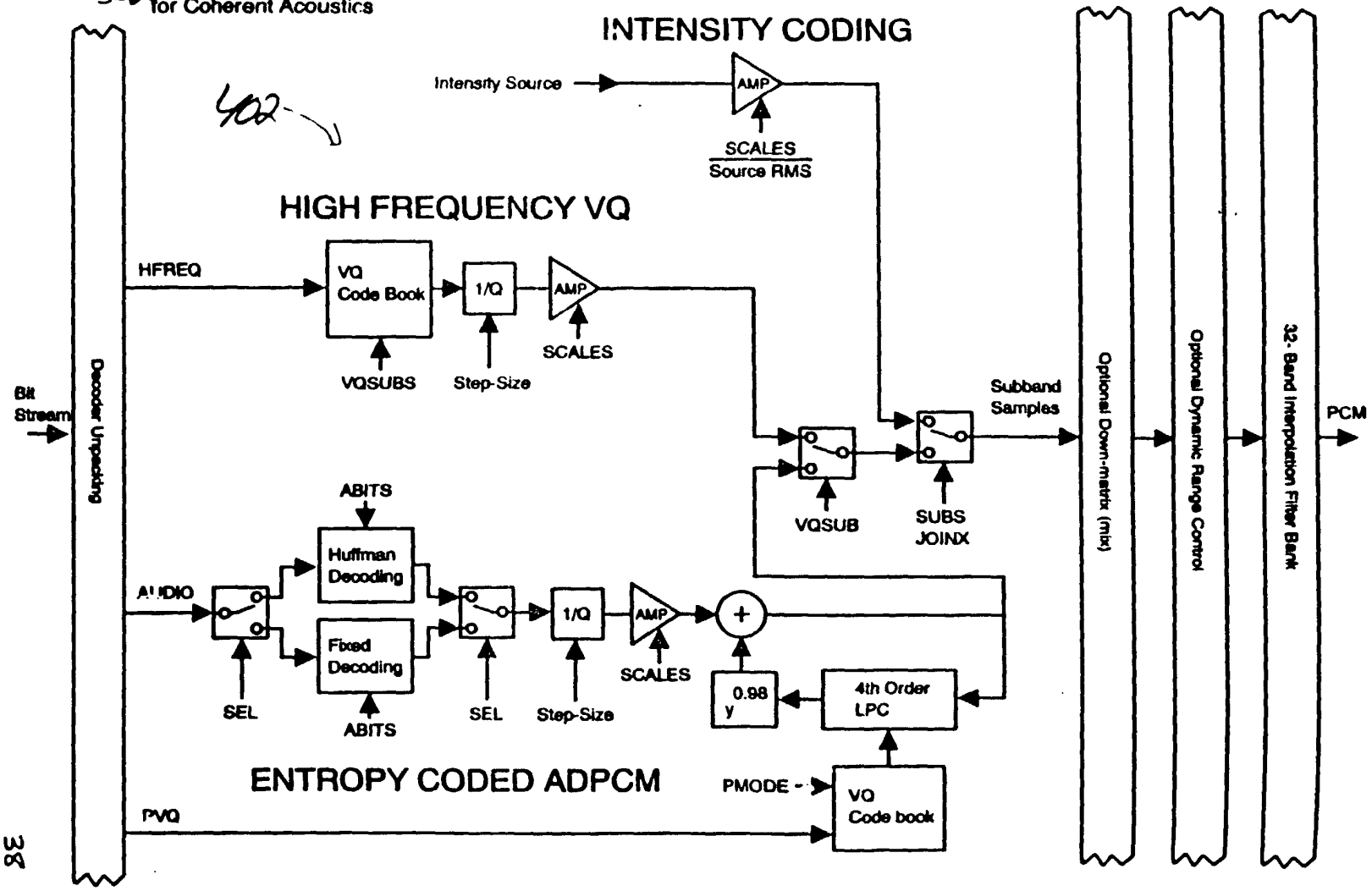

Fig 33 Coherent Acoustics Decoder Flow Diagram

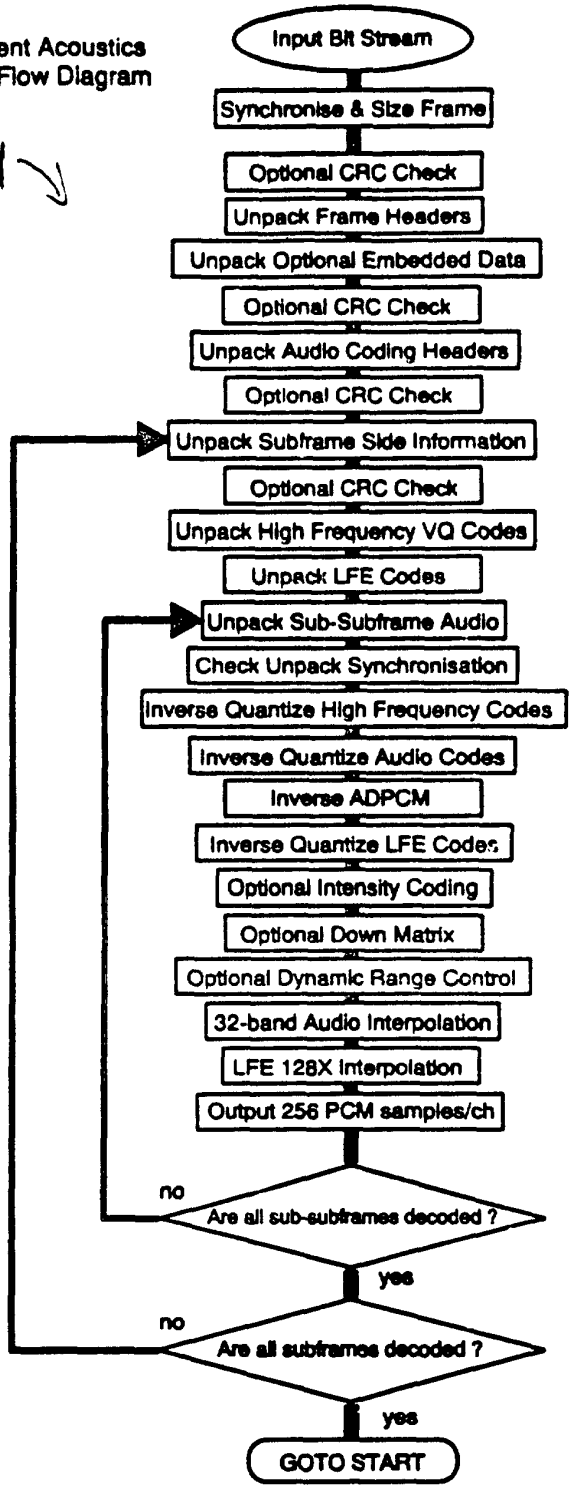

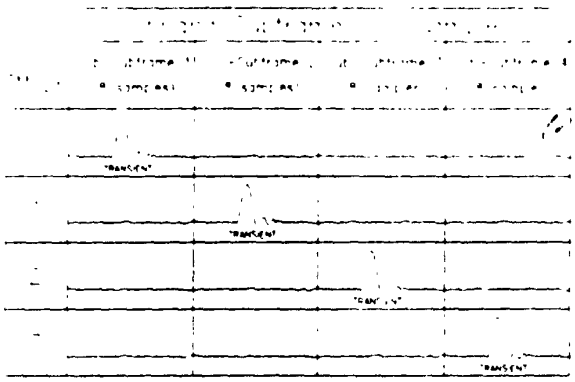

	Subframe (32 samples)			
	Sub-Subframe 1 (8 samples)	Sub-Subframe 2 (8 samples)	Sub-Subframe 3 (8 samples)	Sub-Subframe 4 (8 samples)
	1st Scale Factor			
	1st Scale Factor	2nd Scale Factor		
	1st Scale Factor		2nd Scale Factor	
	1st Scale Factor			2nd Scale Factor

Fig 35 Transient Management for 4-Sub-Subframes

34

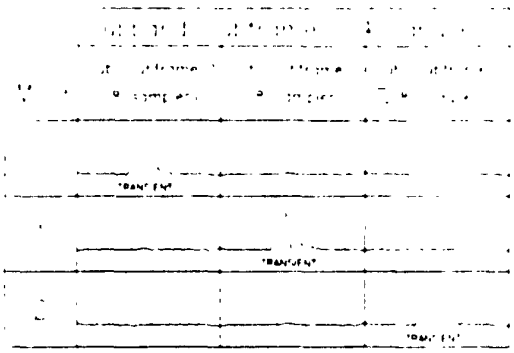

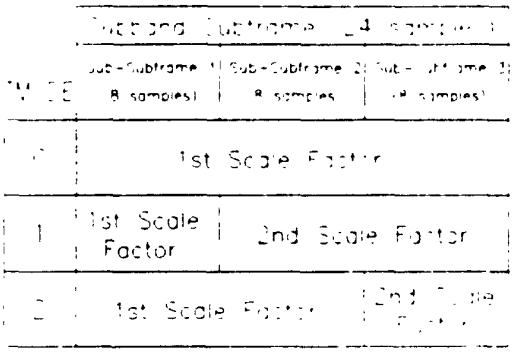

	Subband Subframe (24 samples)		
	Sub-Subframe 1 (8 samples)	Sub-Subframe 2 (8 samples)	Sub-Subframe 3 (8 samples)
	TRANSIENT		
1		TRANSIENT	
2			TRANSIENT

	Subband Subframe (24 samples)		
TIME	Sub-Subframe 1 (8 samples)	Sub-Subframe 2 (8 samples)	Sub-Subframe 3 (8 samples)
0	1st Scale Factor		
1	1st Scale Factor	2nd Scale Factor	
2	1st Scale Factor		2nd Scale Factor

412

Fig ~~4~~ 35 Transient Management for 3-Sub-Subframes

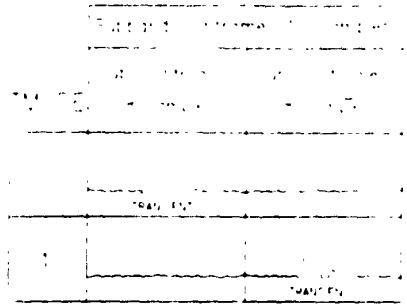

TMODE	Subband Subframe (16 samples)	
	[illegible]	[illegible]
	TRANSIENT	
1		TRANSIENT

TMODE	Subband Subframe (16 samples)	
	Sub-Subframe 1 (8 samples)	Sub-Subframe 2 (8 samples)
0	1st Scale Factor	
1	1st Scale Factor	2nd Scale Factor

4/4

Fig. 36 Transient Management for 2×Sub-Subframes

Fig 37 Simplified I/O Procedure for Coherent Acoustics

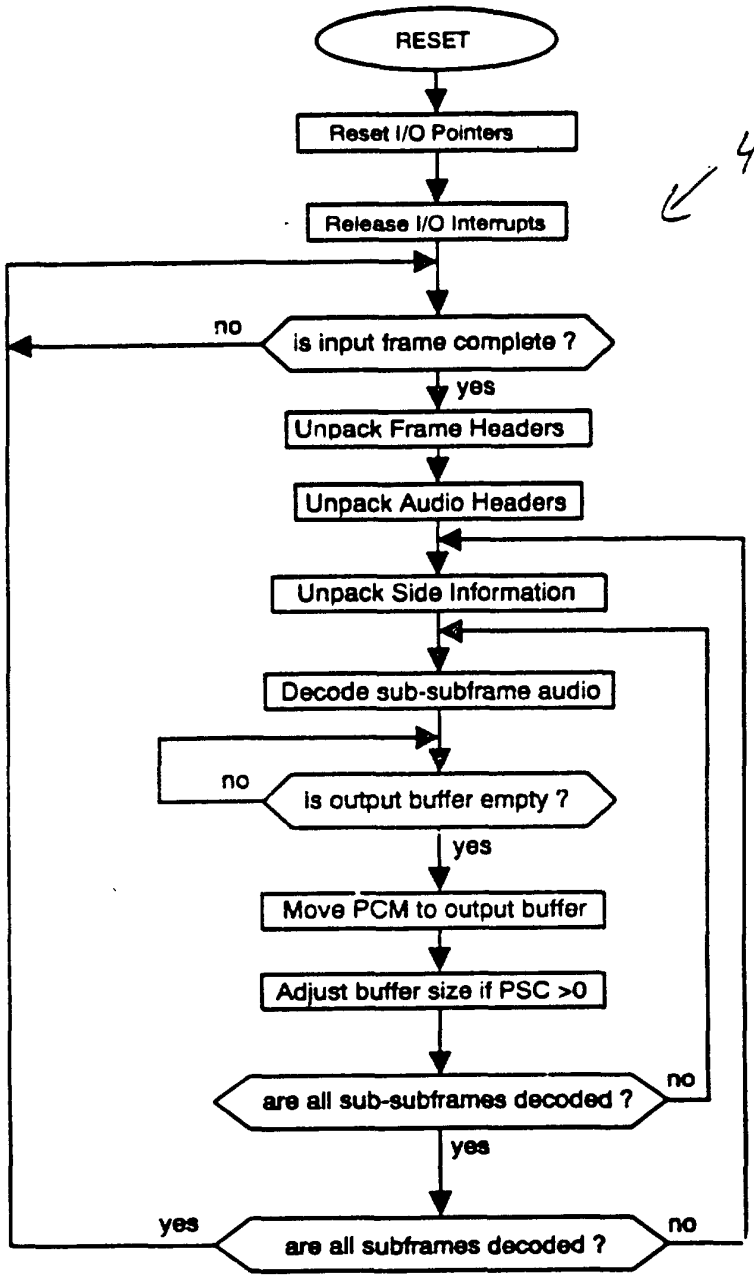

416

Fig 9 Typical Coherent Accustics Data Stream comprising 16 audio sub-subframes (4096 PCM samples/ch)

